The properties of simple electric circuits

Electrical current occurs when charge moves through a conductor from an area which is negatively charged to an area which is positively charged.

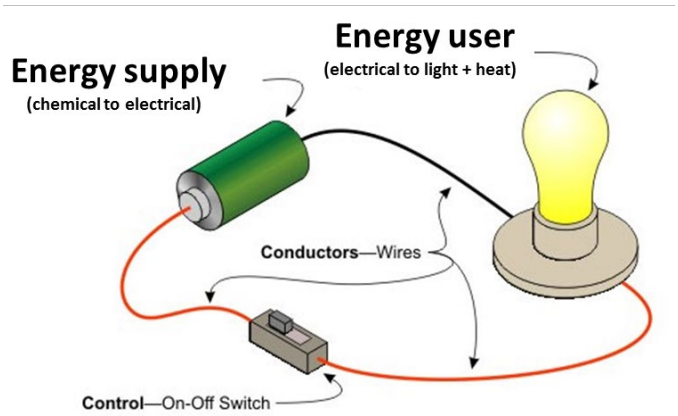

Electrical energy is provided by the battery, cell or **energy supply** and when there is a closed circuit a device, which is the **energy user**, will transform the electrical energy to another type. e.g. The light bulb will transform electrical energy to light and heat energy. A circuit is a continuous pathway around which the charge carried by electrons can flow.

There is a need for a complete circuit when making use of electricity. A circuit must be closed for the charge to flow and produce a current.

Transforming electrical energy in a circuit

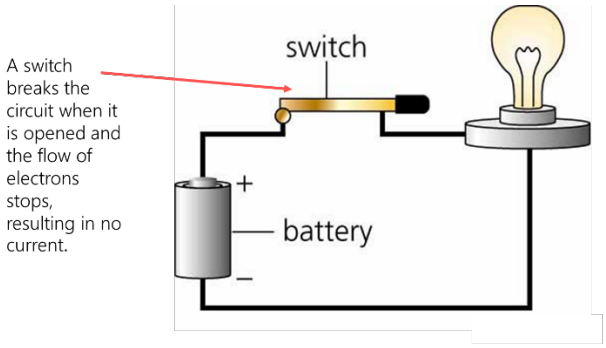

A circuit is made up of electrical components connected, so charge, carried by electrons, moves through the components. A battery or a cell is an energy supply. It supplies energy to the charges. The charges then move around the circuit carrying the energy. When the charges get to an energy user (or component) of the circuit e.g. a lamp, they must work to get through the part. The energy is changed into another type of energy (e.g. heat, light, sound, movement).

Before the component, the charge has a certain amount of energy and after it has gone through the component it has another amount of energy. There is a **difference** in energy from one point to another. This is called the **potential difference.**

We draw Circuit diagrams using symbols

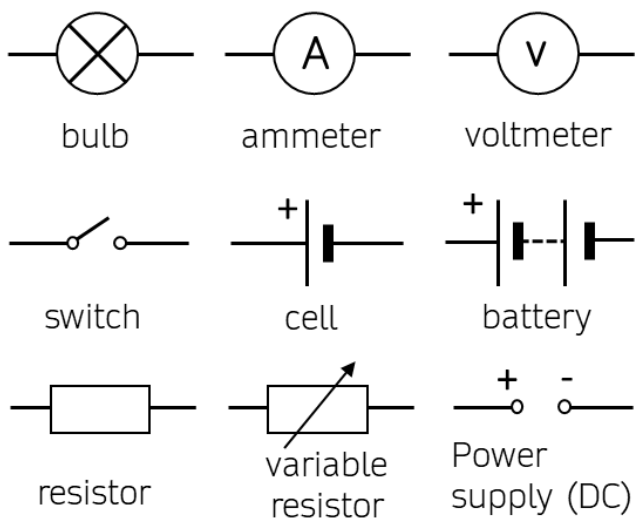

Circuit symbols are used to represent components of an electrical circuit. These symbols can be used universally by electricians and scientists regardless of their different languages, to show how different circuits are arranged.

A ruler must be used when drawing circuit diagrams.

When drawing all circuits will need: a **power source** such as a battery or cell, a **complete circuit** travelling from the positive (larger line) terminal to the negative (smaller line) terminal and one or more **components** (power users) such as a bulb.

Series and Parallel circuits

Circuits can have one or more pathways for the current to flow

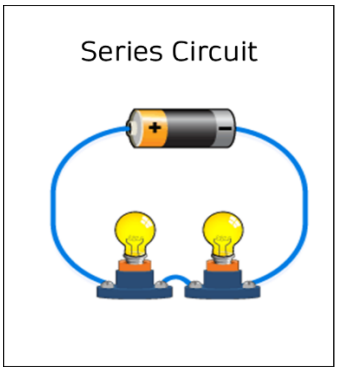

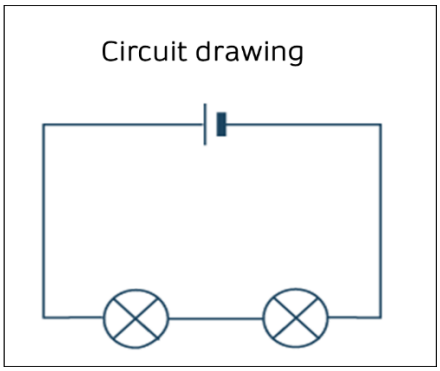

In a series circuit, the charge moves along one path only. The electrical current flows through one component then the next – more lamps added in series cause their brightness to decrease.

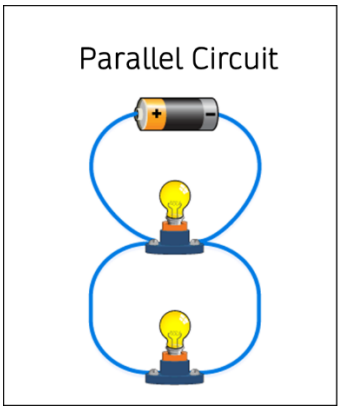

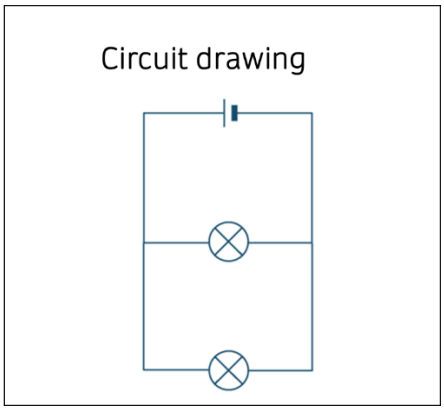

In a parallel circuit, charge moves through two or more pathways. When more lights added in a parallel circuit this does not affect the brightness of each lamp.

Conductors and Insulators

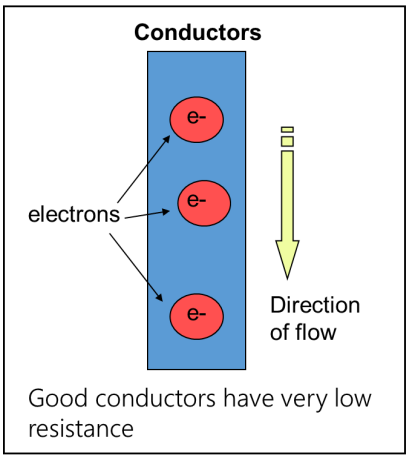

Charge can travel freely in **conductors** such as metal. **Conductors allow the flow of current through them**

Copper is considered to be a conductor because it "conducts" the electrical current or flow of charge fairly easily. Most metals are good conductors of electrical current. Copper is just one of the more popular materials that is used for conductors. Conductors have **low resistance** since current moves easily. Other materials that are sometimes used as conductors are silver, gold, and aluminium.

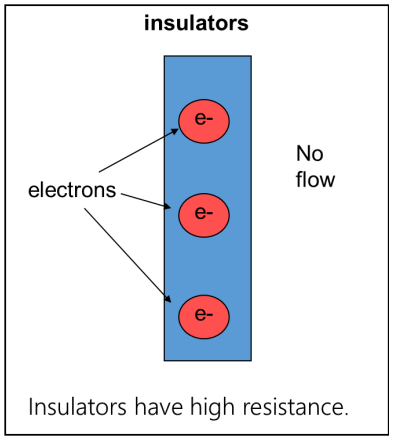

Charge cannot travel through **insulators** such as plastic. **Insulators prevent the flow of current through them**

Insulators are materials that have just the opposite effect on the flow of charge. They do not let electrons flow very easily from one atom to another. Insulators are materials whose atoms have tightly bound electrons. These electrons are not free to roam around and be shared by neighbouring atoms. Insulators have **high resistance** since there is little to no current flow. Some common insulator materials are glass, plastic, rubber, air, and wood

An electric current is a flow of charge

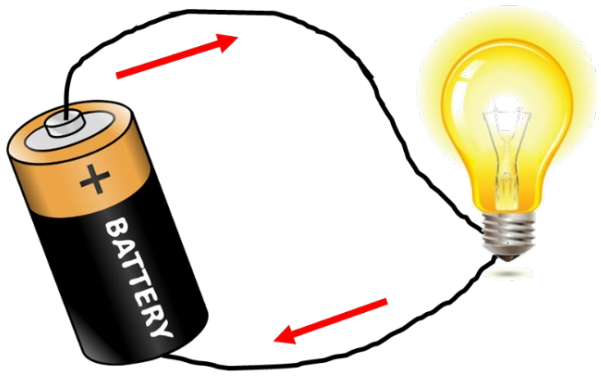

Direction of flow of **current**

An **electric current** is charge moving from place to place: in a circuit the charge is moving in wires. Electric current measures the rate of flow of electric charge. Particles called electrons carry the electric charge. While some substances called **conductors** conduct very well, e.g. metals, other substances are not able to conduct or nearly conduct no electric current, e.g. glass, called **insulators**. Electric current is nearly as fast as the speed of light. (In an electrolyte charge is carried by ions)

EXTENSION:

The charge of an electron is negative. Previously people thought that positive particles serve as charge carriers. Due to this error the current flow is moving in the opposite direction of the electrons by convention from the **positive terminal** to the **negative terminal**.

Ammeters are used in circuits to measure Amps

To measure current, we need a charge counter which is "in" or is part of the circuit. We can measure the amount of electric current flowing in a circuit with a device called an **ammeter**. The unit of electric current is the Amp - which is often abbreviated to the letter A, especially if it comes after a number. So, for example, 3 Amps can also be written 3A.

To measure the current flowing in a circuit you must connect the ammeter in **series** with the other components

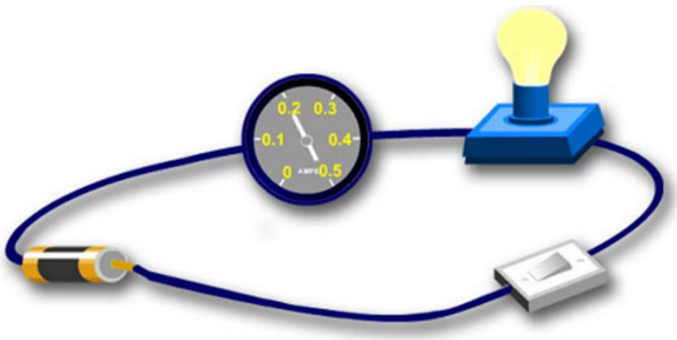

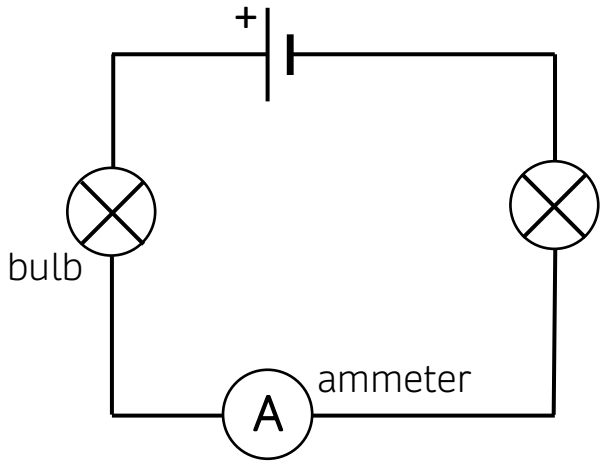

In Series circuits, the current is the same at any point on the circuit	In parallel circuits, the current is shared out between branches
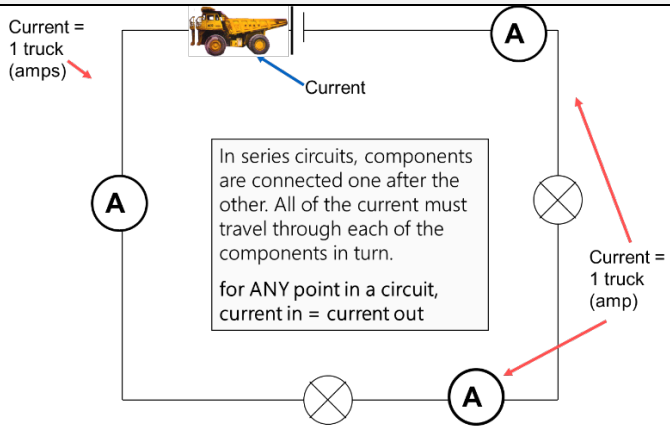	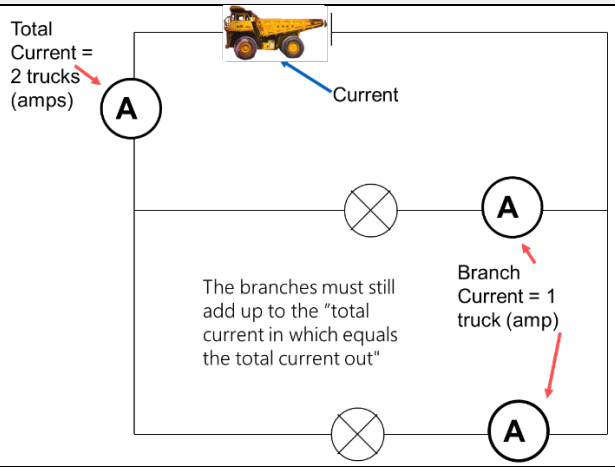

The 'potential difference' (voltage)

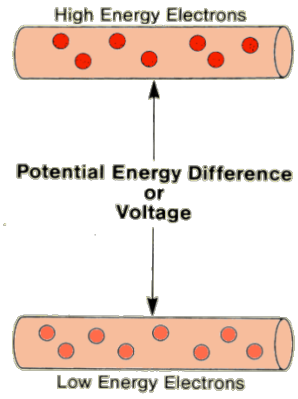

An electric current will not flow through a circuit unless there is a source of energy like a battery or mains electricity to **push** the electric charges along through the wire. 'Potential difference' is a measure of how much energy the electric charges have between two points in a circuit. Potential difference is also known as **voltage**. The more potential difference the more energy is available to be transferred into components attached to a circuit.

The 'potential difference' (voltage) of an electrical supply is a measure of the energy it can transfer from an electrical supply elsewhere

Potential difference (voltage) can be measured with a voltmeter

A voltmeter is used to measure **potential difference** (voltage) and is placed in **parallel** to an appliance. **The potential difference** is a difference in energy per amount of charge between two different points of a circuit. We need a device to measure the energies at two points in the circuit and say what the difference is. This is called a **voltmeter** and measures the numbers of volts.

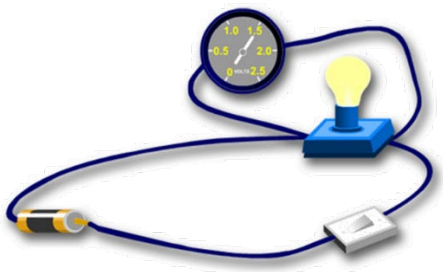

The unit is the **volt, V.** We can measure the energy of electric charges in a circuit before they enter a bulb and after they leave it by putting a voltmeter in parallel across the bulb.

In Series circuits, the potential difference is "shared out" around the circuit	In parallel circuits, the potential difference is the same across all branches
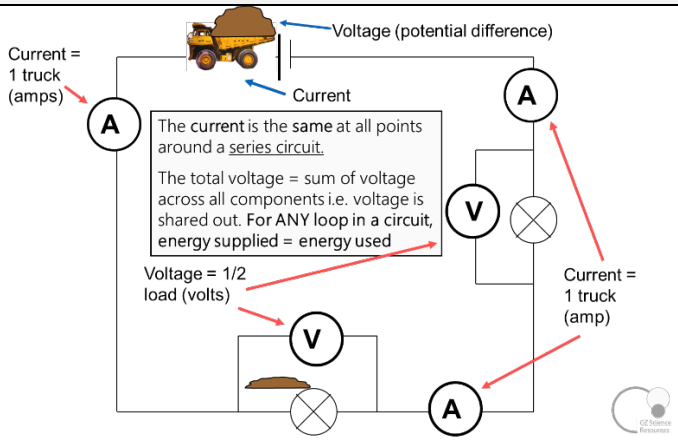	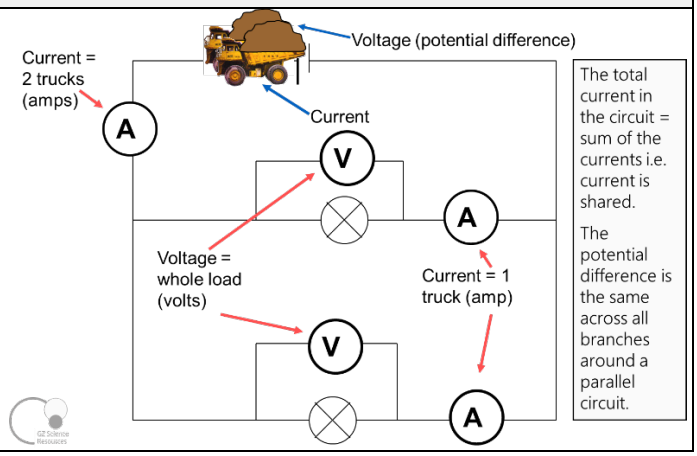

SUMMARY Current and Potential difference in Parallel and Series circuits		
	Current	Potential difference (Voltage)
Series	❑ Same everywhere in the circuit ❑ Doesn't increase as more bulbs added	❑ total potential difference coming out of battery is all used up by components (i.e. bulb) ❑ total potential difference loss is shared between components
Parallel	❑ total current coming out of battery is shared amongst branches ❑ increases as more bulbs added	❑ total potential difference loss is the same across all components

Advantages and Disadvantages of Parallel and Series circuits		
	Advantage	Disadvantage
Wiring done in parallel	❑ Other bulbs remain working if one bulb is blown or removes ❑ All bulbs glow brightly	❑ More current is needed when extra bulbs added ❑ The battery runs out quicker
	Advantage	Disadvantage
Wiring done in series	❑ You can turn off all the appliances / lights with one switch ❑ The wiring is simpler	❑ If one bulb is disconnected the circuit is not complete and all the bulbs will go out ❑ Resistance of the circuit is greater if more than one bulb – the other bulbs don't glow as brightly ❑ Hard to find the blown bulb

Predictions of Ammeter and Voltmeter readings

Predictions can be made about the current (amps) in both the series and parallel circuits using the rules.

In a series circuit if one component reads 10A then all components will read the same. In a Parallel circuit the current reading leaving the power supply must be divided between branches.

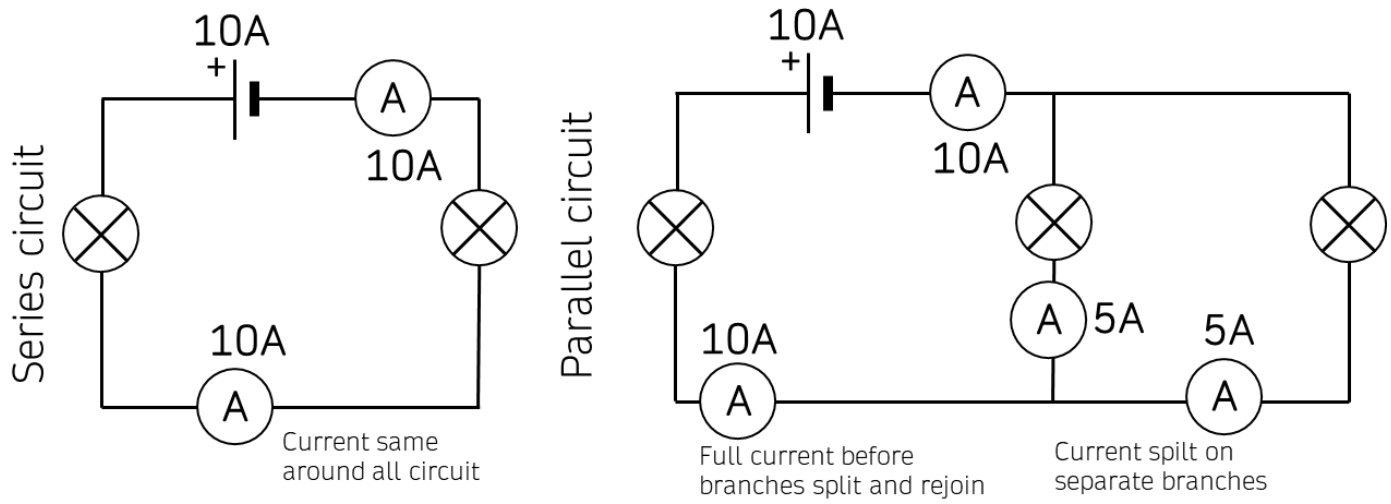

Predictions can also be made about potential difference (voltage) readings with the total potential difference across the power supply shared out to components in a series circuit and equal to the potential difference in each branch of a parallel circuit. Predictions can be tested by setting up each circuit and taking multiple voltage and current readings.

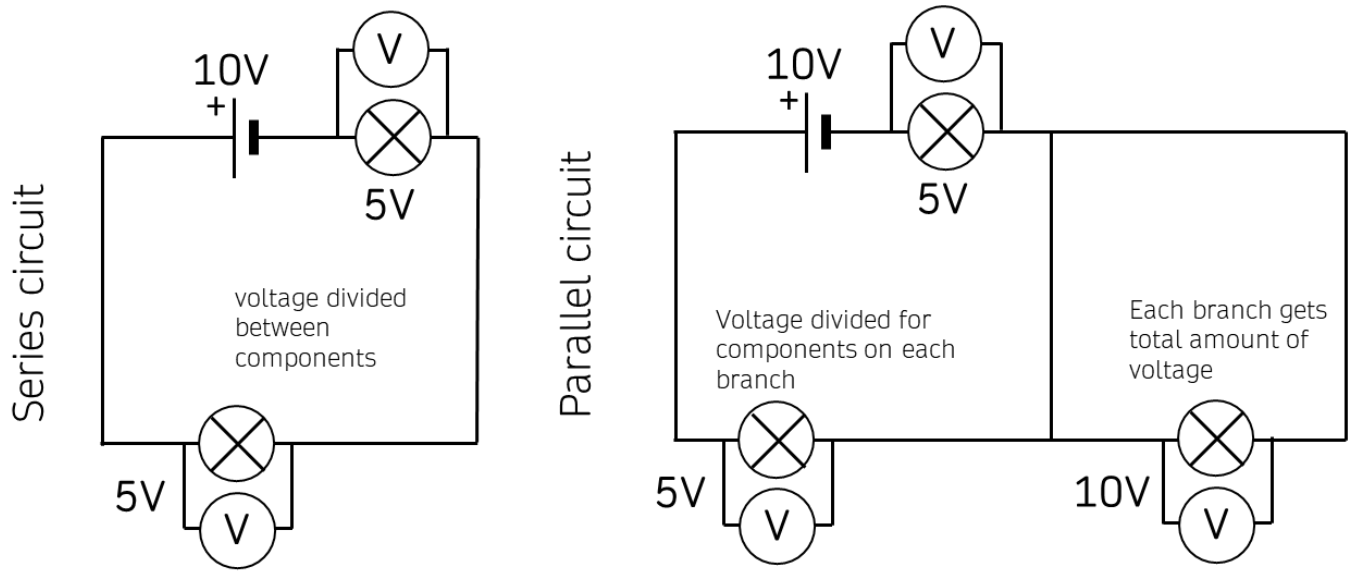

Investigating the brightness of adding bulbs in series and parallel circuits

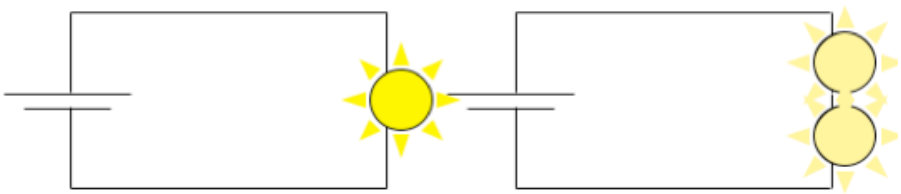

An Investigation will show that the more bulbs that are added to a **series** circuit the dimmer they will collectively be. In a **parallel** circuit if each bulb has its own circuit then the brightness of the bulbs will not be affected.

Electrical resistance - EXTENSION

Resistance (symbol R) measures how difficult it is for current to move through a component. Resistance is measured in ohms (symbol Ω)

Resisters will reduce the current that flows through a circuit. Components that add resistance to a circuit can often transform electrical energy in light, sound or heat energy, such as the thin wire in a light bulb.

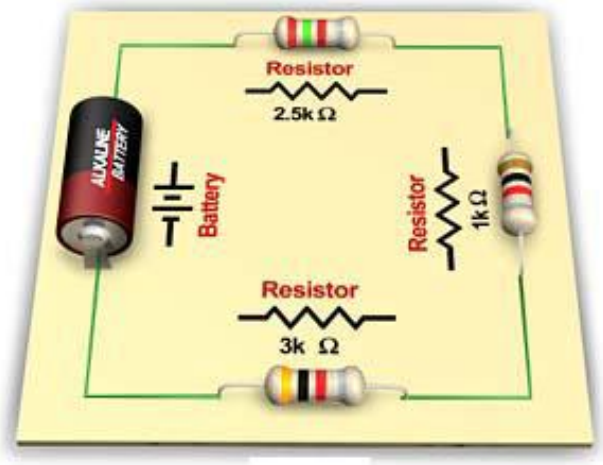

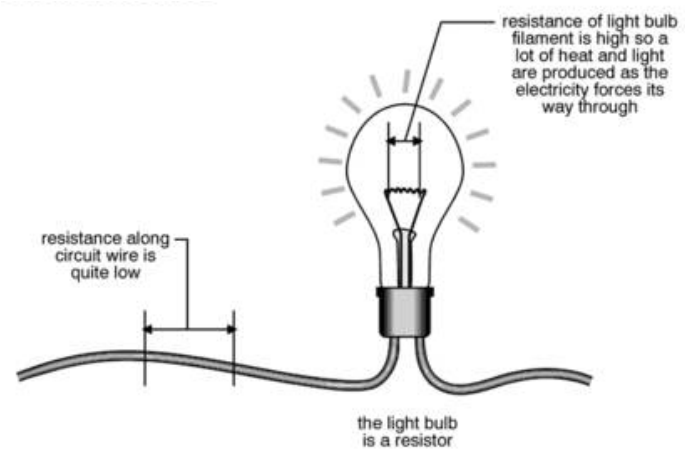

Parts of a circuit which offer high resistance transform a greater amount of electrical energy into light and heat energy. Therefore, the high resistance, very thin wire of a filament light bulb glows hot and bright while the lower resistance thicker wire providing the current to the bulb stays cooler.

The resistance of a component (in ohms) = potential difference across component / current through component

Resistance is calculated using R = V/I

The resistance of an object determines the amount of current through the object for a given voltage across the object.

Where:

R is the resistance of the object, usually measured in **ohms**

V is the potential difference across the object, usually measured in **volts**

I is the current through the object, usually measured in

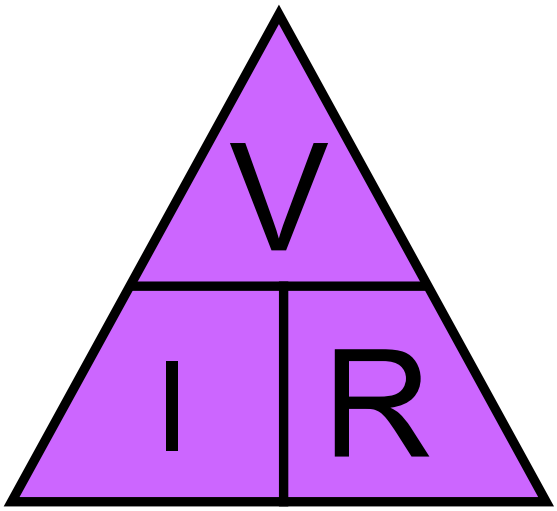

The higher the resistance the less the current.

1. Name the circuit symbols

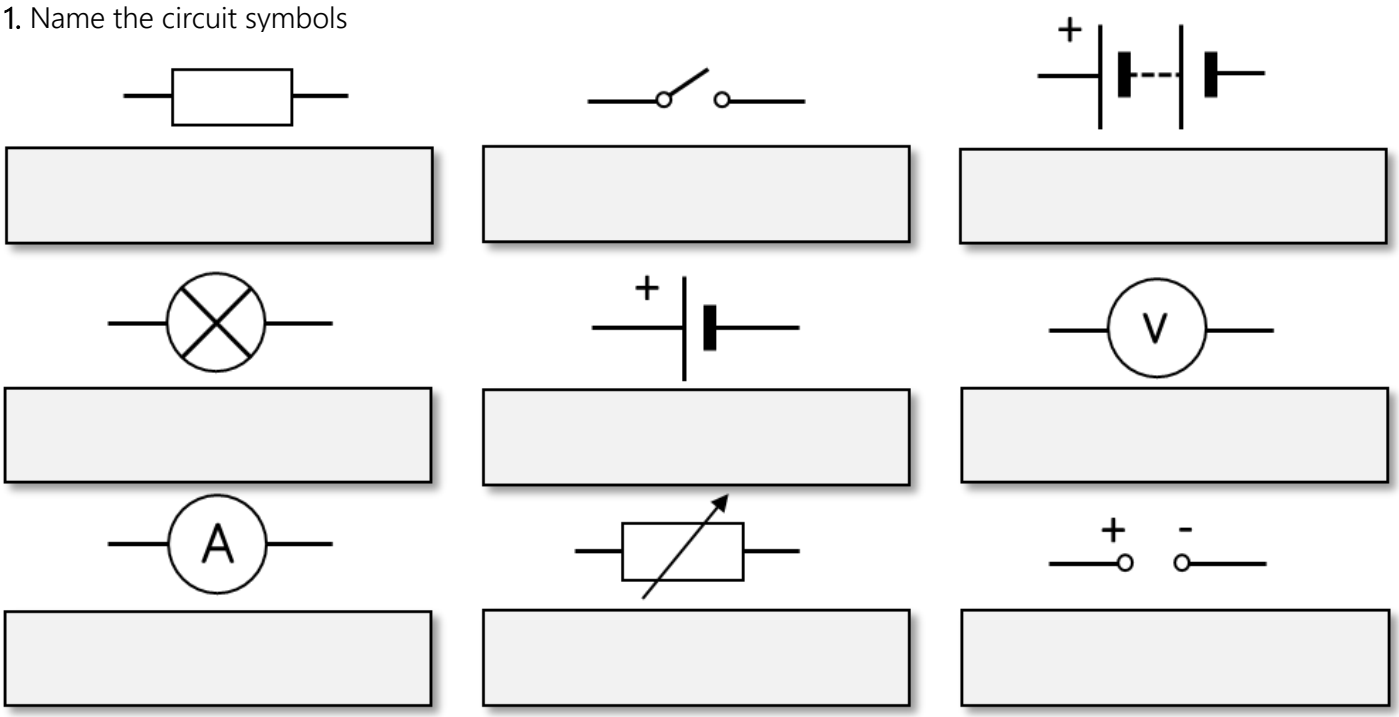

2. A circuit diagram was poorly drawn. List the mistakes and redraw it correctly.

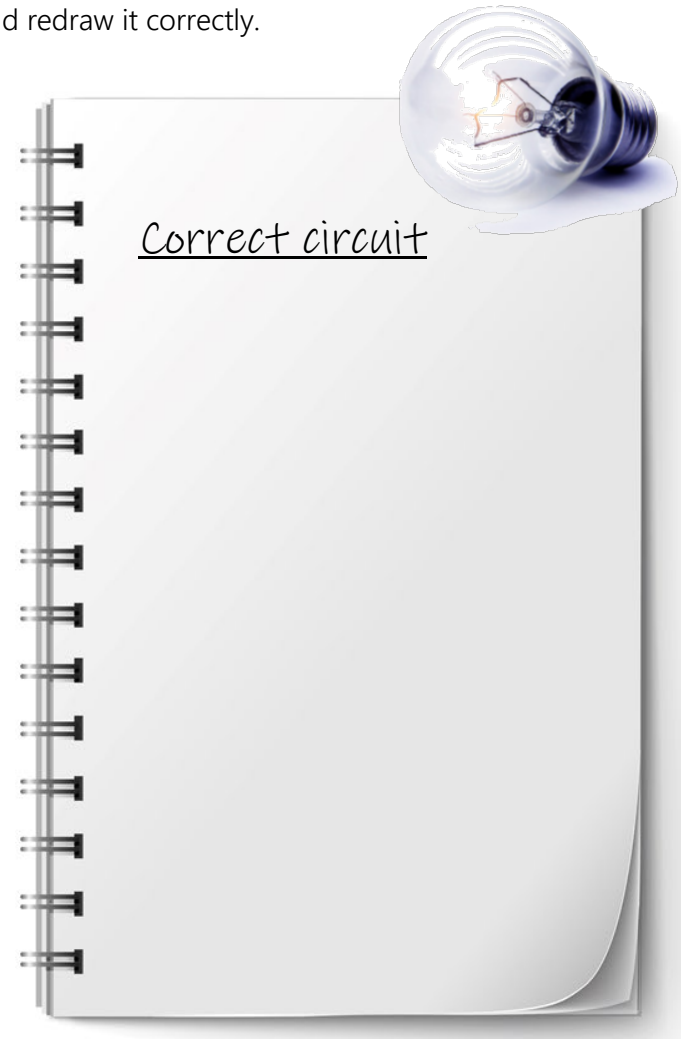

3. Complete summary chart of Conductors and Insulators

Conductor
Definition

Insulator
Definition

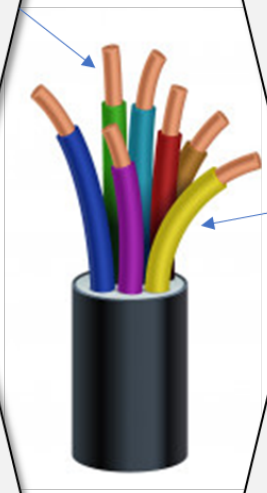

Current flow in Conductors

Current flow in Insulators

Examples of Conductors

Examples of Insulators

4. Identify circuits as series or parallel.

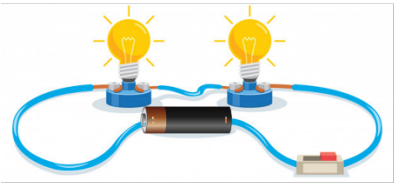

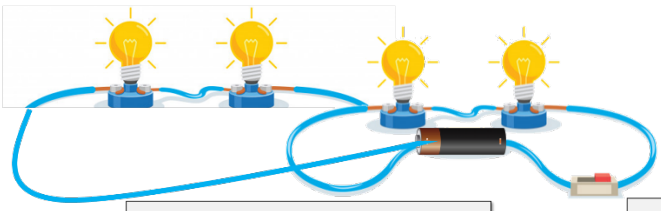

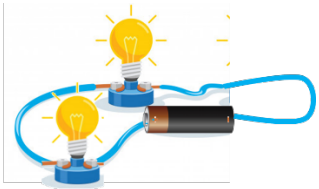

5. Select the correct symbols and draw the following circuit. *Make sure your lines are straight and connected.*

A series circuit with a battery, 2 bulbs, a switch, an ammeter and a voltmeter around 1 bulb.	A parallel circuit with 2 branches and a bulb on each branch, a power supply, a switch that turns off 2 bulbs but leaves one on.

6. Complete the summary of current and voltage (potential difference)

Voltage (potential difference)
Definition

Units:

Measured using a:

Draw in the meter

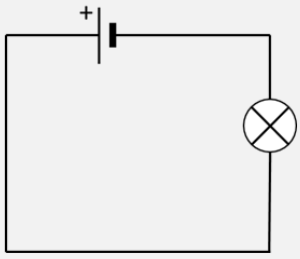

Voltage
Represented by the pressure in a water tank forcing the water through a pipe

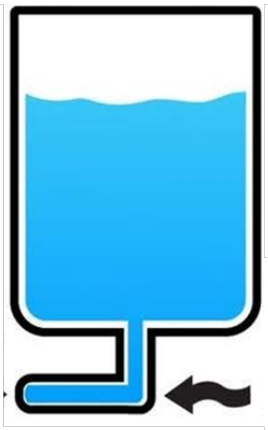

Current
Represented by the water flowing through the pipe, the more pressure, the more current you have

Current
Definition

Units:

Measured using a:

Draw in the meter

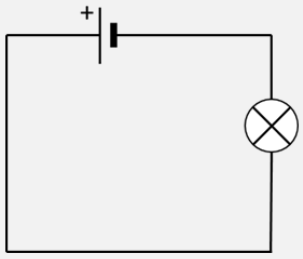

7. Complete the statements in the Summary chart

shared	is the same	increase/s	used up

SUMMARY Current and Potential difference in Parallel and Series circuits		
	Current	Potential difference (Voltage)
Series	Current _____ everywhere in the circuit. Current doesn't _____ as more bulbs added.	Total potential difference coming out of battery is all _____ by components. Total potential difference loss is _____ between components.
Parallel	Total current coming out of battery is _____ amongst branches. Current _____ as more bulbs added.	Total potential difference loss is _____ across all components.

8. Predict the missing current readings (with units)

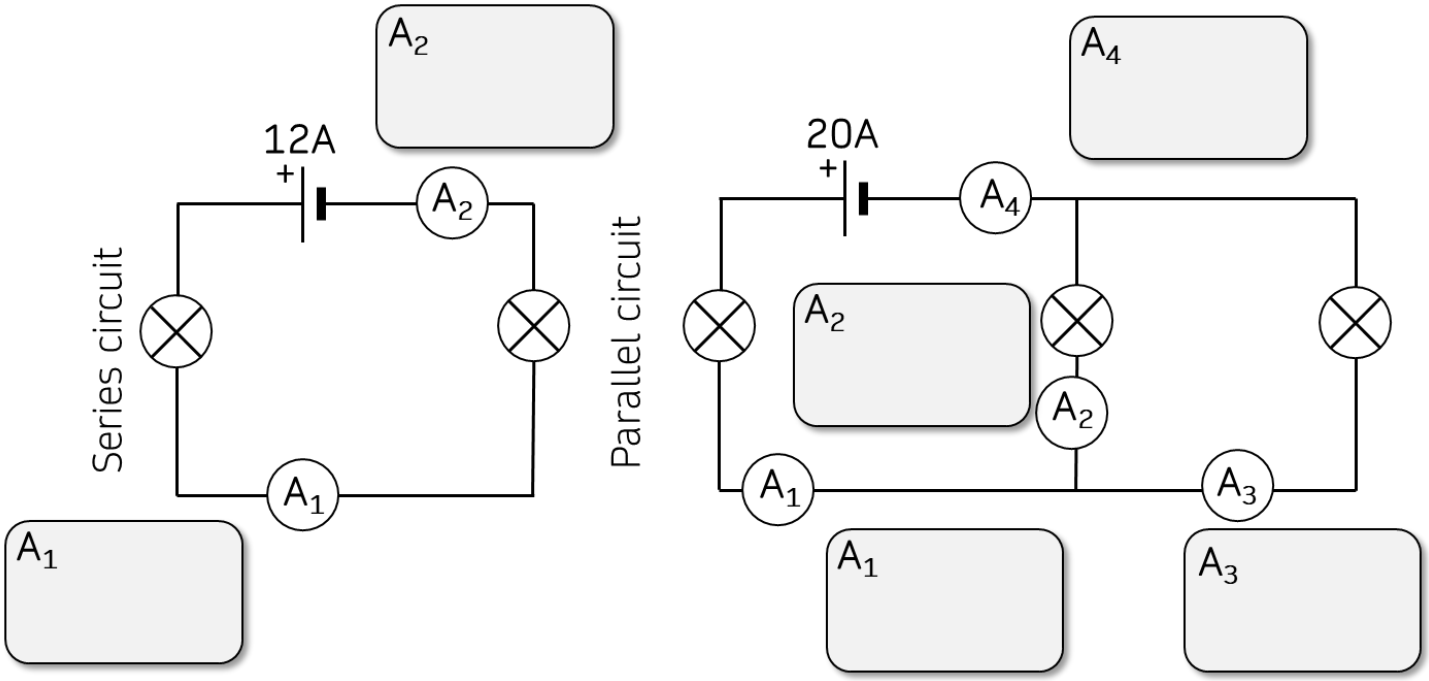

9. Predict the missing voltage readings (with units)

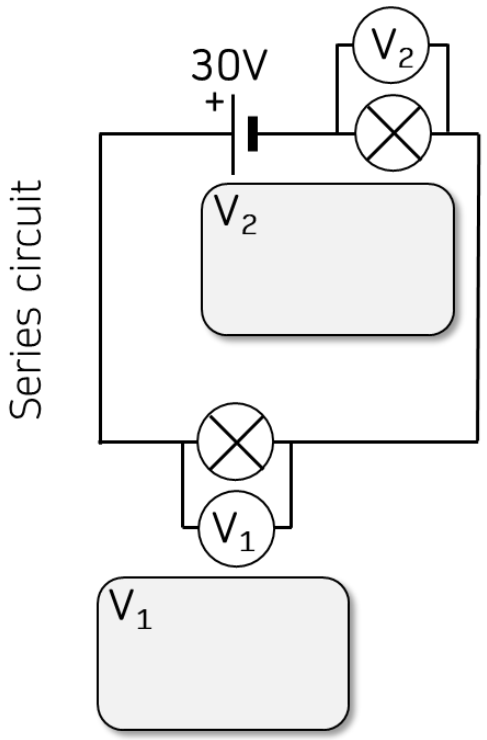

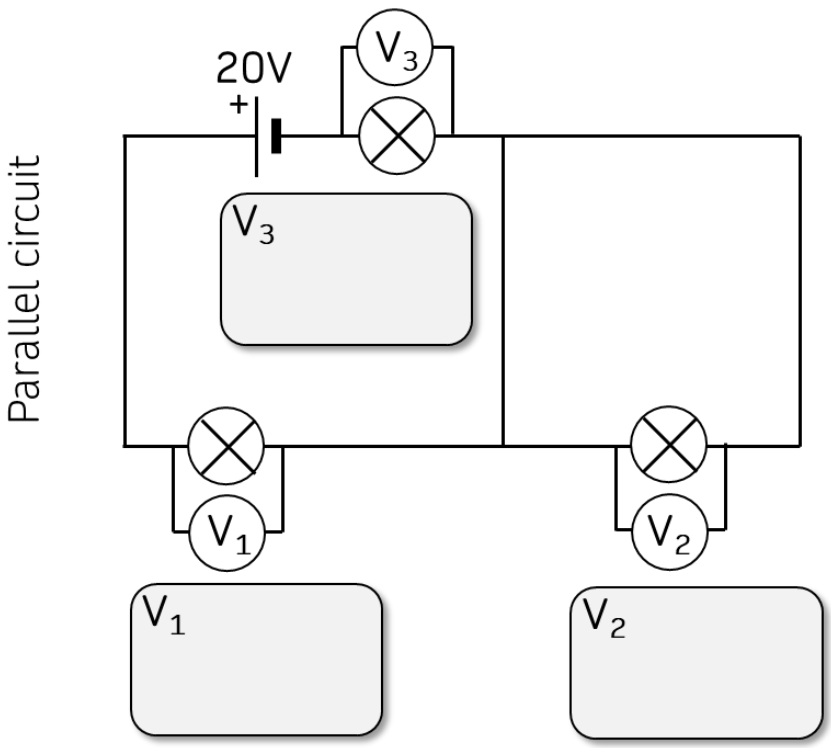

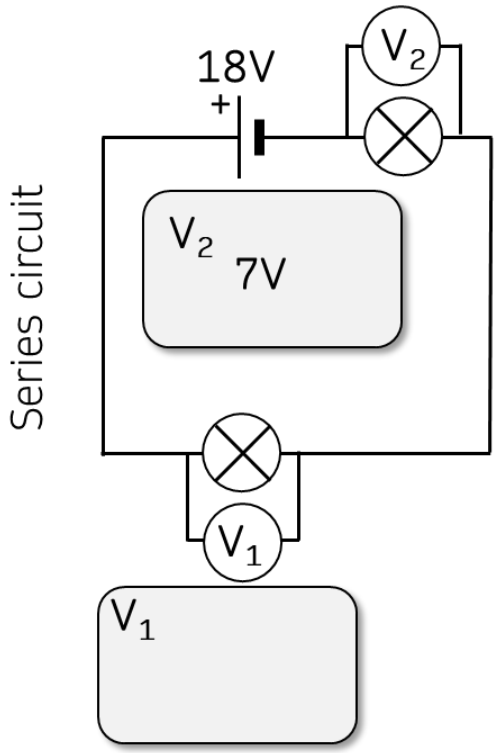

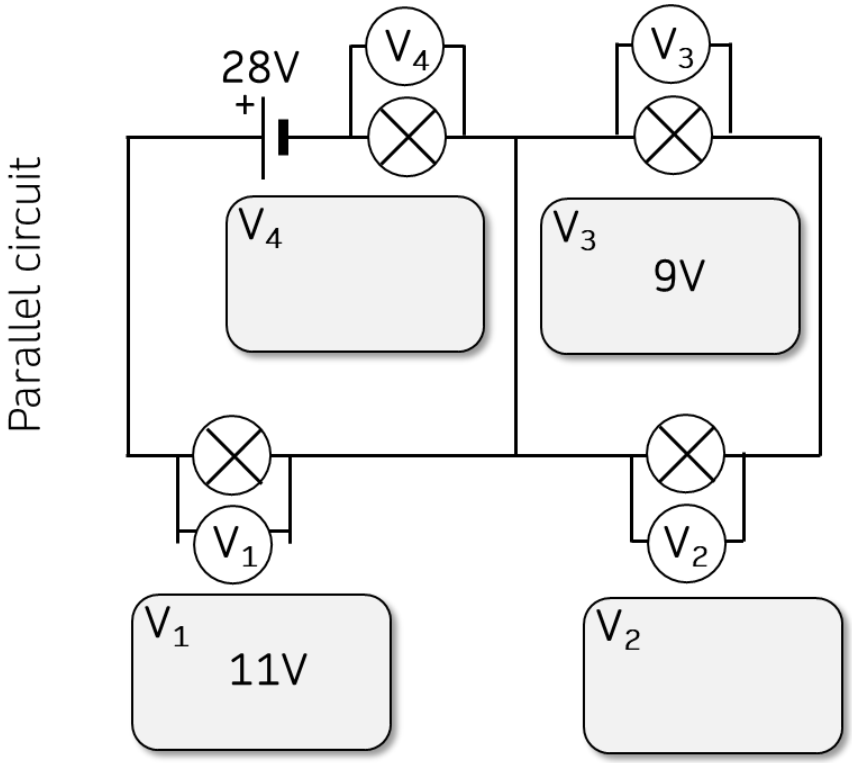

10. Calculate the missing values (with units) **EXTENSION** **reminder V = IR**

V	I	R	V	I	R
	16.5	4.8	9.8		2.4
24.1		3.2	33.0		4.2