Magnets attract some metals but not others

Some objects attract iron and steel. They are called magnets. Magnetic materials have the ability to attract some materials but to attract and repel each other

Only iron, cobalt, nickel, and some iron alloys like steel are able to act as magnets. The particles that they consist of are able to align themselves so that all their negative ends are facing the same direction. Aluminium cans are not magnetic whereas 'tins' are largely made of iron and are magnetic.

It is sometimes difficult to distinguish between a magnet and a magnetic material. When two magnets are put together there is either attraction or repulsion, but when a magnet and a magnetic material are put together there is just attraction.

The Law of Repulsion and Attraction

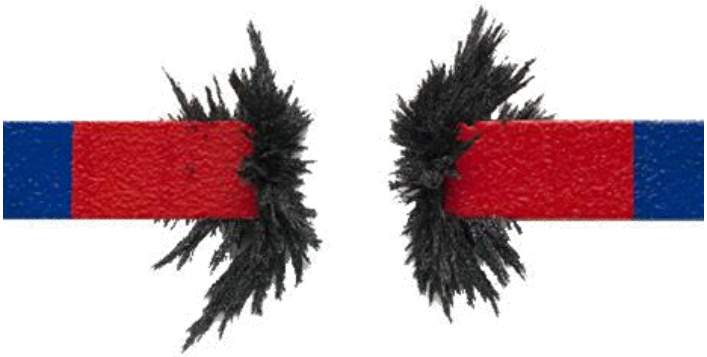

Like poles will repel each other. e.g. north and north.
Unlike poles will attract each other. e.g. north and south

A magnet is an object that has a magnetic field around it and attracts objects made of iron. A magnetic field is a region around a magnet where iron objects have a force on them and can be made to move.

The ends of a magnet are called poles, one end is the N or North pole, the other is the S or South pole.

Examples of Magnets

Magnets have a variety of uses. Examples of uses of permanent magnets in the home include fridge magnets, cupboard door latch, magnetic knife holder, magnetic screwdriver etc.

The Maglev train uses magnets to 'float' the train above the rail, reducing most friction and allowing it to travel very fast

Magnetic fields are arranged in fixed patterns

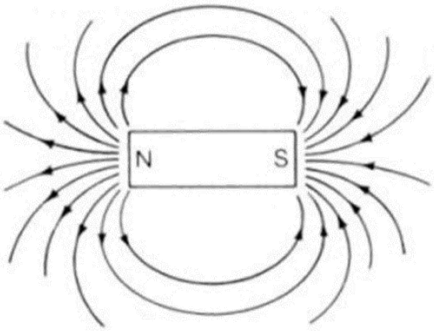

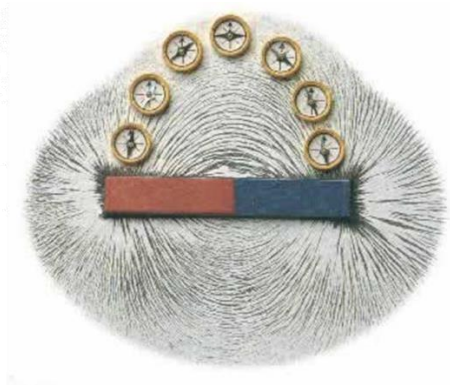

A magnet has a magnetic force field around it. When another magnet or an iron object enters the field, it experiences a force as either a push or a pull. Field patterns produced by bar magnets can be visualized using iron filings. This is the magnetic field. The field lines move out from the N end of a magnet and into the S end.

Compasses, which contain a movable magnet, can also be used to show magnetic fields. The needles will align in the direction of the field.

Magnetic field interactions

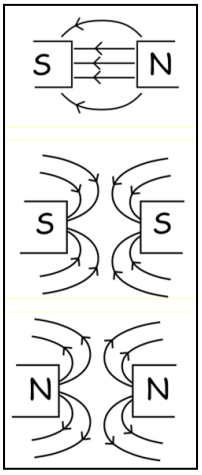

A strong field is produced between unlike poles, moving in the direction between North to South., shown by arrows

Between the middle of like poles the net magnetic force is zero due to the fields cancelling out. This is shown by a blank space between.

The field lines move out from a North pole (and into a South pole).

The Earth is surrounded by a magnetic field

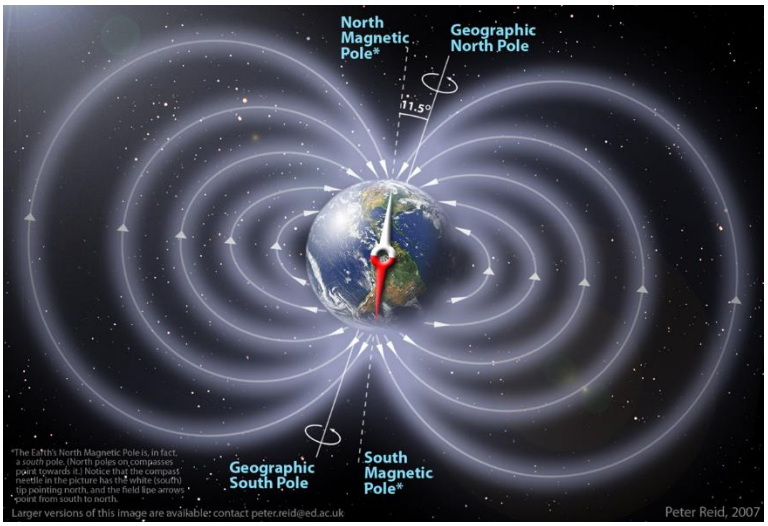

The Earth has a magnetic field. The outer core of the Earth is liquid iron and as heat from the very hot solid iron inner core moves through it then electrical currents are produced. Current Scientific theory suggests that this in turn produces an electric field that stretches far beyond Earth.

This magnetic field produces a North and South Pole, although they are not exactly in the same place as the geographical North and South Pole.

The North of a needle compass is attracted to the South, so the North Pole is actually the South Pole!

An electric current itself has a magnetic field

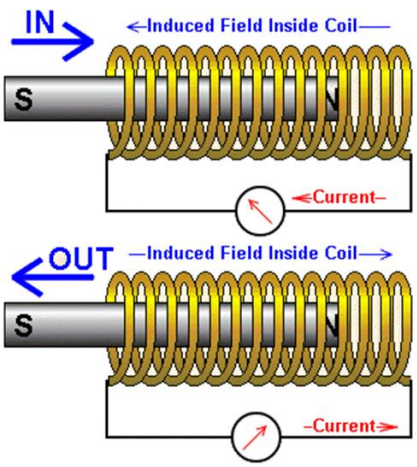

Electromagnetism describes the relationship between magnetism and electricity. When electrical charges are moving they create or induce magnetic fields.

A changing magnetic field will create an electric current and an electric current will induce a magnetic field.

This is called electromagnetic induction, it is the principle used to drive generators, motors, transformers, amplifiers and many more electrical devices.

Electrical currents moving around a magnet can produce an electromagnet

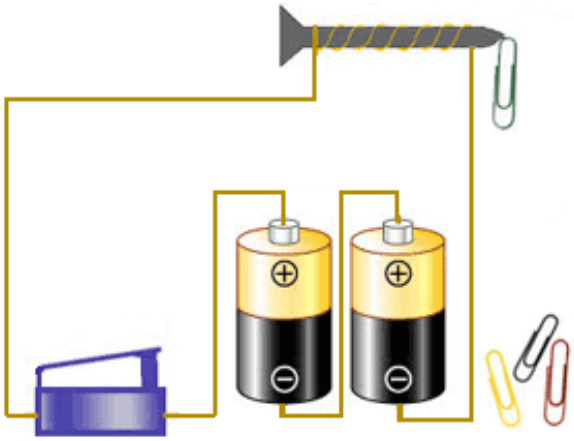

A magnetic field can be made stronger with a coil of conductive wire wrapped around it and an electric current flowing through the wire. This is called an electromagnet. An electromagnet can be made stronger by increasing the number of turns (how many times the wire is wound) and by increasing the current. A coil of wire is called a solenoid.

Electromagnets are used when a stronger magnet is required such as for picking up cars at a wreckers and has the advantage of being “switched off” when the current is stopped.

Using a relay to switch on a light bulb

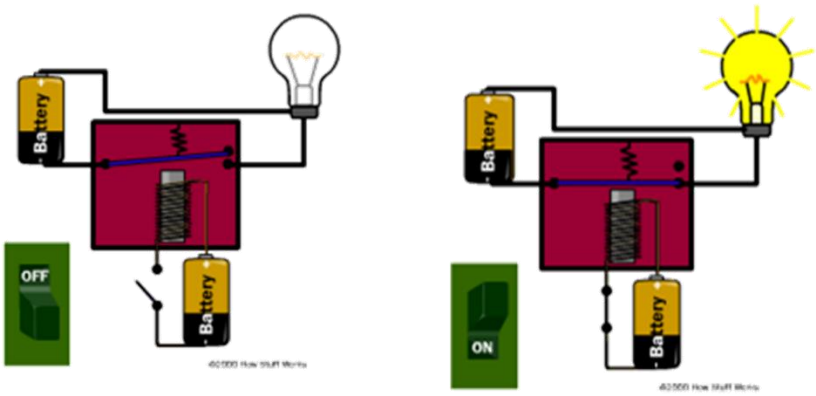

A relay is an electrically operated switch. It works on the principle of a magnet attracting iron when a current is flowing, closing the switch and creating a complete circuit and releasing it when the current is no longer flowing therefore opening the switch

The relay has a coil containing a sliding iron core to turn on the light bulb

When the current flows, the coil becomes magnetised and pulls soft iron core to the left. The head of the core touches the two metal contacts thereby completing the light bulb circuit

Electric charge produced by friction is the same charge which, moving around a circuit, produces an electric current

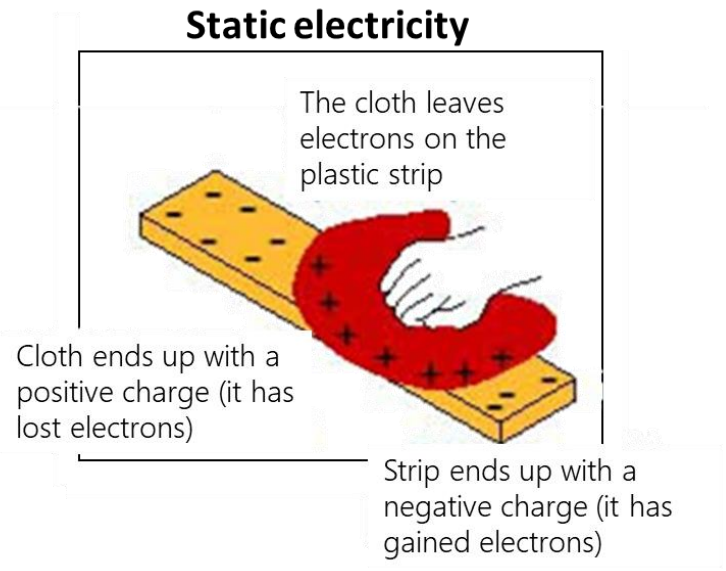

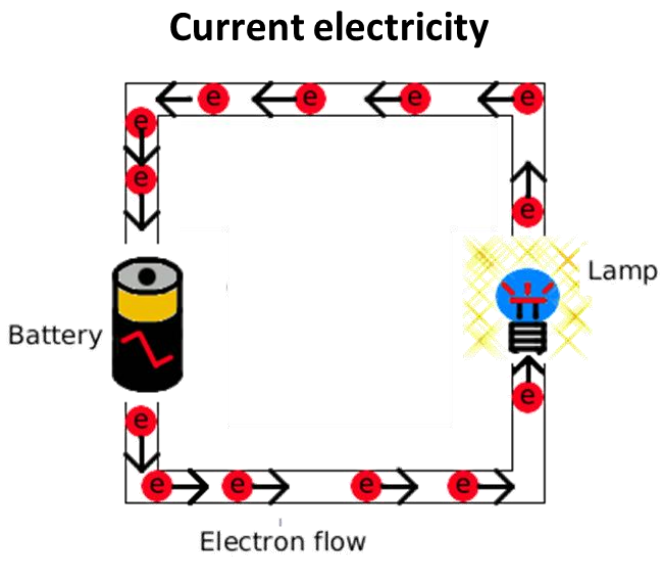

There are two types of electricity. Static electricity involves charge that is built up on insulators, usually by friction and when there is a large force acting on the charge, the charge will suddenly move. Current electricity involves the movement of charge through a conductor and it flows continuously if a pathway is formed.

Static Electricity

Static electricity is the build up of electrical charges on the surface of a material, usually an insulator (non-conductor of electricity). It is called "static" because there is no current flowing, as there is in alternating current (AC) or direct current (DC) electricity.

Usually, two materials are involved in static electricity, with one having an excess of electrons or negative (−) charges on its surface and the other material having an excess of positive (+) electrical charges. An object with no charge is neutral

Attraction or repulsion

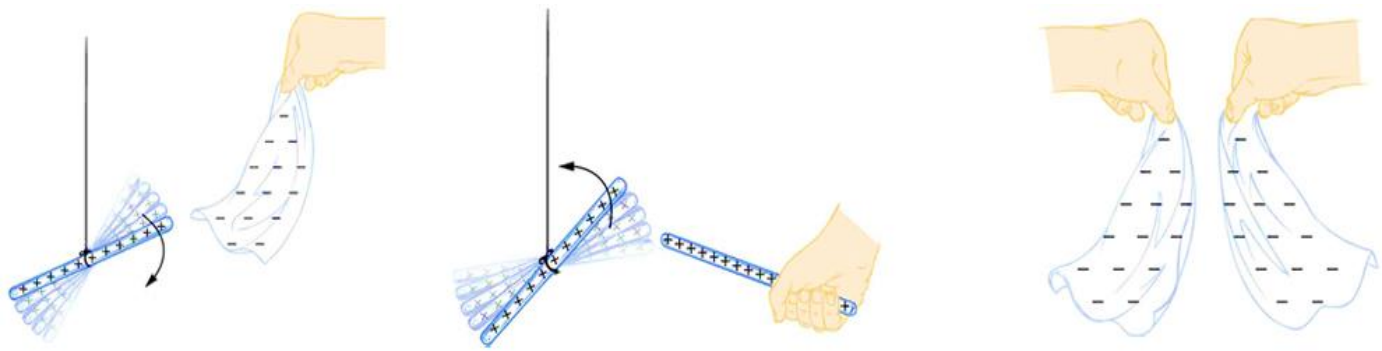

There are only two types of charge, which we call positive and negative. Like charges repel, unlike charges attract, and there are electric forces between charges. Both positive and negative charges exist in neutral objects but they can be separated by rubbing one object with another. For objects (large enough to be visible), negatively charged means an excess of electrons and positively charged means a depletion of electrons (that have been removed). Charge is measured in coulombs (C)

Law of Conservation of charge

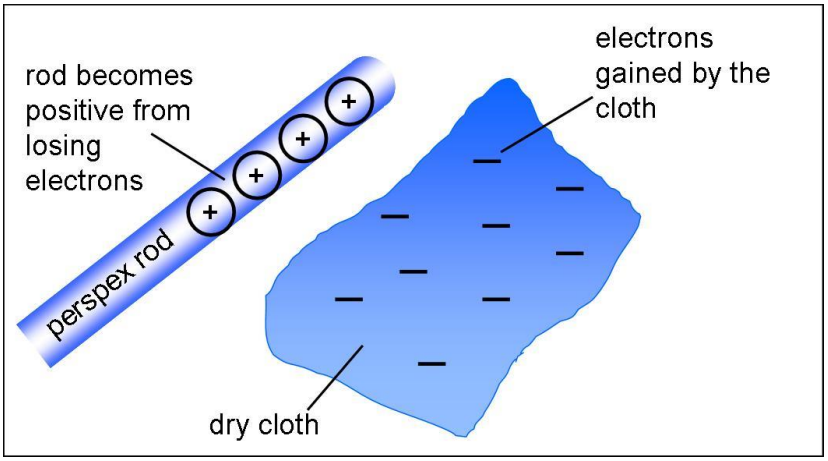

No charge is actually created or destroyed when charges are separated. Instead, existing charges are moved about. In all situations the total amount of charge is always constant. This universally obeyed law of nature is called the law of conservation of charge.

Charging by contact

Static electricity involves a build-up of charge when two different objects are rubbed together and electrons from one jump across to another. This is called charging by contact. Some materials, such as plastic, hold onto electrons better than others do and they will become negatively charged. The other object, due to electrons being lost, will become positively charged. The two objects are attracted to each other due to their positive and negative charges.

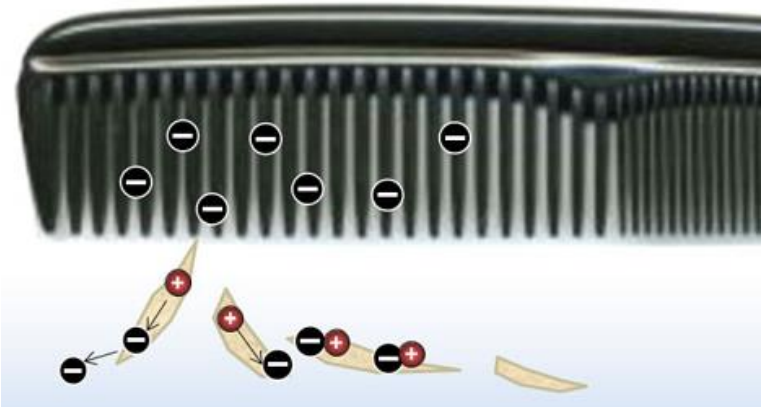

Charging by induction

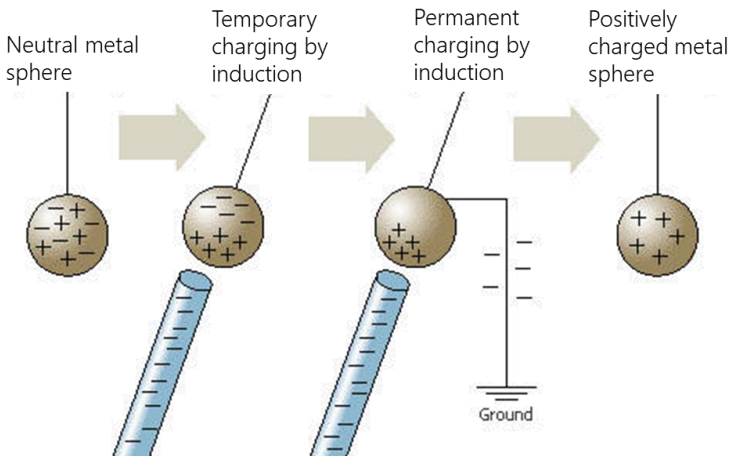

Objects can also be charged by induction. When a negatively charged object is held close to another object but not touching then the negative electrons are repelled and move away (if a path is created which "earths" the object) and the non moving protons cause the object to be positively charged.

If the object being charged is not earthed then as soon as the negatively charged object is moved away then then electrons will just shift back again and neutralise it once more.

Charge can be transferred using a van der Graaf generator

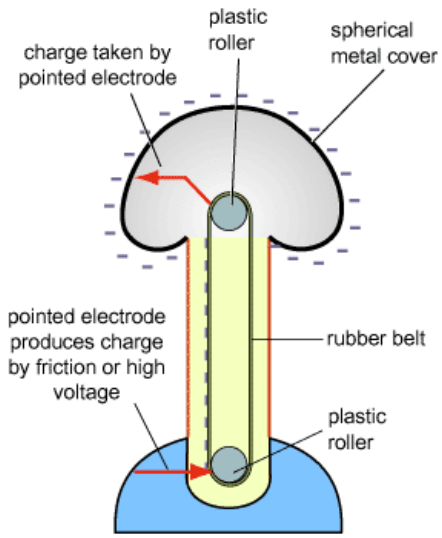

The van der Graaf generator produces and stores charge to create static electricity. A big rubber band move over a piece of felt, which is insulated and creates friction and the negative electrons are "stripped away'. The electrons move up the rubber band to the metal ball and into a person whose hand is placed on the generator. By standing on an insulating surface, the charge cannot go through the body and get to the ground. The repelling electrons, trying to get as far away from each other as possible, cause the person's statically charged hair strands to repel each other and stick up.

Charge can be detected using an electroscope

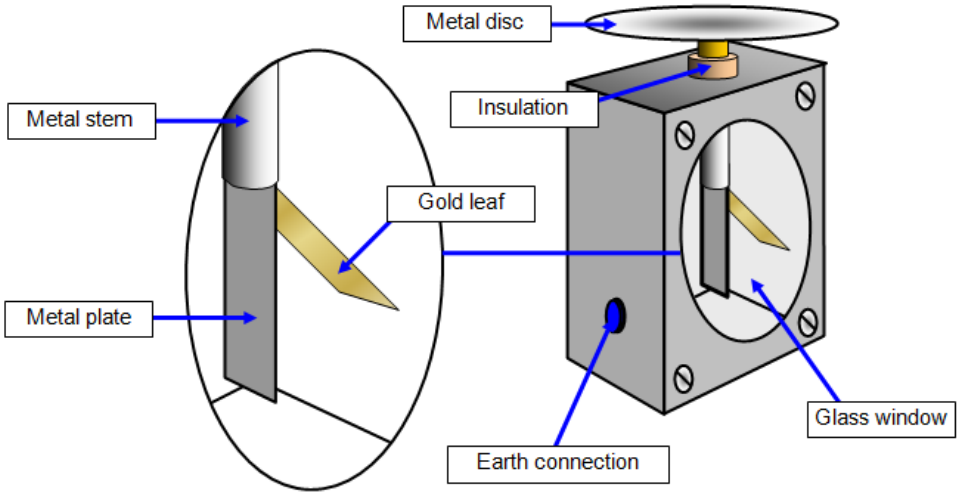

An electroscope can detect charge by induction or contact. A charged object is placed on or near the metal disc. A negatively charged object will repel negative charge in the insulated electroscope. The negative charge will travel down to the gold leaf and metal plate (some electroscopes have two gold leaves). The negatively charged leaf/plate will then repel each other and move apart. The more they more apart the more the charge held in the original object

Electrical discharge in air

Electric discharge describes any flow of electric charge through a gas, liquid or solid. If there are enough positive (+) electrical charges on one object or material and enough negative (−) charges on the surface of the other object the attraction between the charges may be great enough to cause electrons to jump the air gap between the objects. When charges move we call it a current.

Once a few electrons start to move across the gap, they heat up the air, encouraging more electrons to jump across the gap. This heats the air even more. It happens rapidly , and the air gets so hot that it glows for a short time. That is a spark.

The same thing happens with lightning, except on a much larger scale, with higher voltages and current.

Electricity is a form of Energy

Electricity is a type of energy. It can be transformed from many other types of energy; kinetic, chemical, nuclear etc.

We make use of electricity by transforming it into other types of energy; light, heat, sound, kinetic etc., to run many appliances and machines.

Energy makes things happen

Any change in speed, size, shape or temperature in an object requires energy. Energy is the ability to do work. Work is applying force to an object and making it move in distance.

Electricity is a type of kinetic energy and Kinetic energy is seen when particles, waves or objects move

Light (radiant) Energy	Sound Energy	Mechanical kinetic Energy	Heat (thermal) Energy	Electrical Energy
Energy traveling in waves, with wavelengths that can be seen by humans.	Sound travels in waves of different pressure. This causes movement of particles. Sound cannot travel in a vacuum.	Movement energy. This can be seen when matter changes its position in space	The kinetic energy that atoms contain. The more they move the more heat they contain. Measured by temperature	Energy contained in electrons. This can either be static like lightning or current electricity that moves in a circuit.




Energy can be transformed from one type to another

Energy can be <u>transferred</u> from one object to another. e.g. heat energy from the rocks cooking the food in a hangi. The type of energy does not change.

Energy can also be <u>transformed</u> from one type into another. e.g. electrical energy changed into heat and sound energy when boiling a jug.

One type of energy can be transformed into many different types.

The total amount of energy never changes. Energy is able to transform from one type to another. All types of potential energy must be transformed into kinetic energy in order for work to be done.

The properties of simple electric circuits

Electrical current occurs when charge moves through a conductor from an area which is negatively charged to an area which is positively charged.

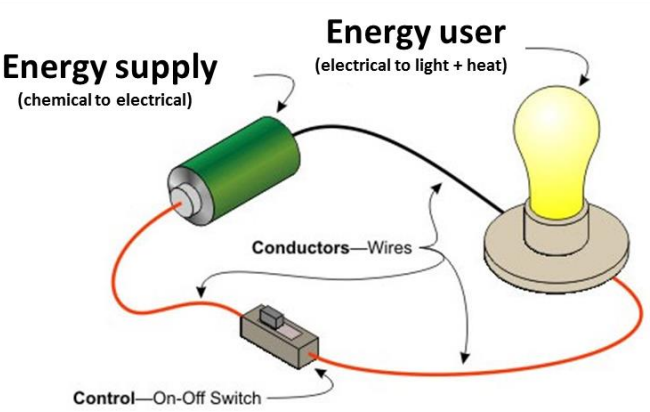

Electrical energy is provided by the battery, cell or energy supply and when there is a closed circuit a device, which is the energy user, will transform the electrical energy to another type. e.g. The light bulb will transform electrical energy to light and heat energy. A circuit is a continuous pathway around which the charge carried by electrons can flow.

There is a need for a complete circuit when making use of electricity. A circuit must be closed for the charge to flow and produce a current.

Transforming electrical energy in a circuit

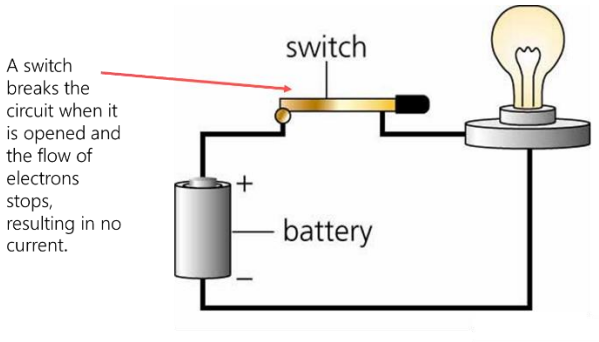

A circuit is made up of electrical components connected together so charge, carried by electrons, moves through the components. A battery or a cell is an energy supply. It supplies energy to the charges. The charges then move around the circuit carrying the energy. When the charges get to a user (or component) of the circuit e.g. a lamp, they have to work to get through the part. The energy is changed into another type of energy (e.g. heat, light, sound, movement).

Before the component, the charge has a certain amount of energy and after it has gone through the component it has another amount of energy. There is a difference in energy from one point to another. This is called the potential difference.

Draw Circuit diagrams using symbols

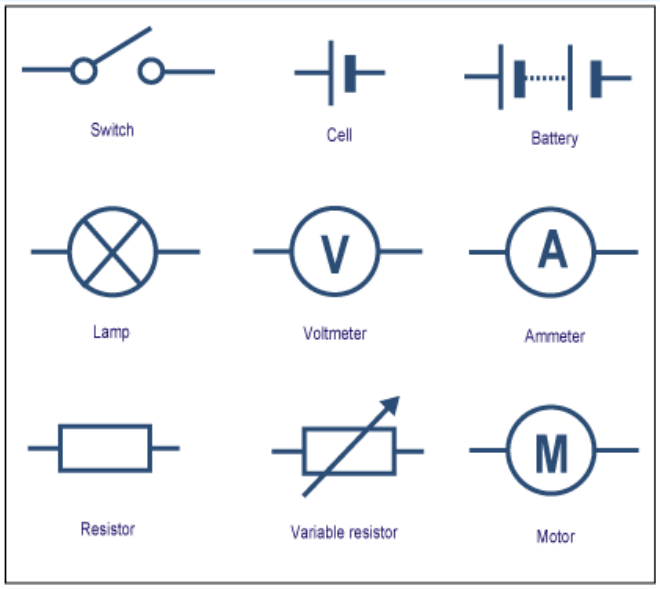

Circuit symbols are used to represent components of an electrical circuit. These symbols can be used universally by electricians and scientists regardless of their different languages, to show how different circuits are arranged.

A ruler must be used when drawing circuit diagrams.

When drawing all circuits will need: a power source such as a battery or cell, a complete circuit travelling from the positive (larger line) terminal to the negative (smaller line) terminal and one or more components (power users) such as a bulb.

Circuits can have one or more pathways for the current to flow

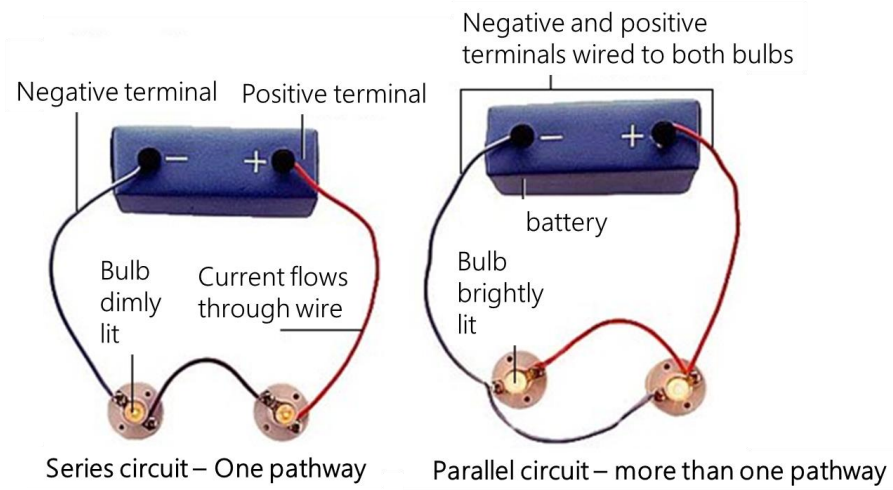

In a series circuit, the charge moves along one path only. The electrical current flows through one component then the next – more lamps added in series cause their brightness to decrease.

In a parallel circuit, charge moves through two or more pathways. When more lights added in a parallel circuit this does not effect the brightness of each lamp.

The effects and uses of conductors and insulators

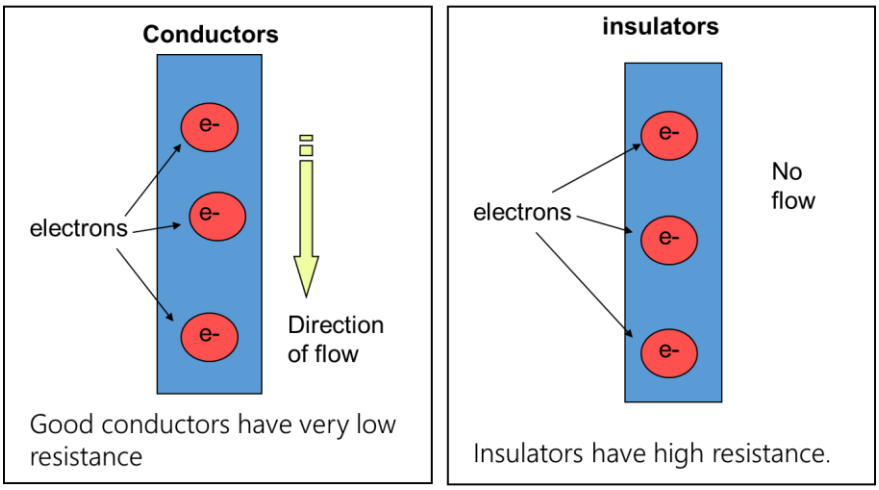

Charge can travel freely in conductors such as metal.

Charge cannot travel through insulators such as plastic.

Conductors allow the flow of current through them

Copper is considered to be a conductor because it “conducts” the electrical current or flow of charge fairly easily. Most metals are considered to be good conductors of electrical current. Copper is just one of the more popular materials that is used for conductors. Conductors have low resistance since charges move easily. Other materials that are sometimes used as conductors are silver, gold, and aluminium.

Insulators prevent the flow of current through them

Insulators are materials that have just the opposite effect on the flow of charge. They do not let electrons flow very easily from one atom to another. Insulators are materials whose atoms have tightly bound electrons. These electrons are not free to roam around and be shared by neighbouring atoms. Insulators have high resistance since there is little to no current flow.

Some common insulator materials are glass, plastic, rubber, air, and wood

An electric current is a flow of charge

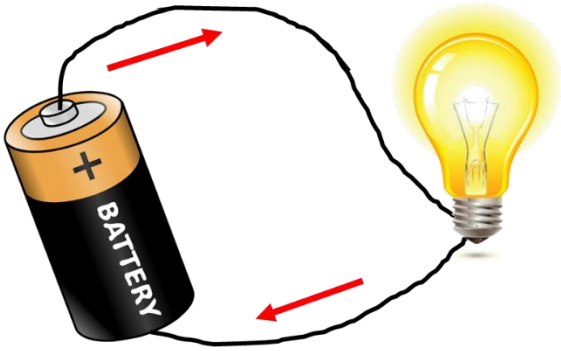

Direction of flow of **current**

An electric current is charge moving from place to place: in a circuit the charge is moving in wires. Electric current measures the rate of flow of electric charge. Particles called electrons carry the electric charge. While some substances called conductors conduct very well, e.g. metals, other substances are not able to conduct or nearly conduct no electric current, e.g. glass, called insulators. Electric current is nearly as fast as the speed of light. (In an electrolyte charge is carried by ions and in plasma is carried by electrons and ions)

Ammeters are used in circuits to measure Amps

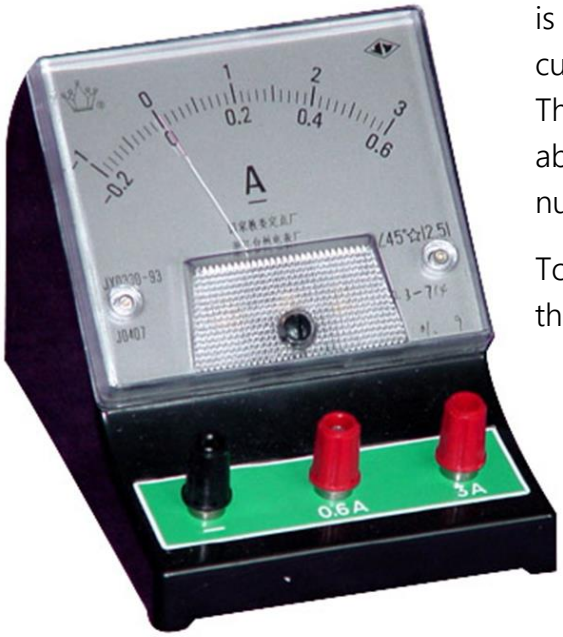

To measure current we need a charge counter which is "in" or is part of the circuit. We can measure the amount of electric current flowing in a circuit with a device called an ammeter. The unit of electric current is the Amp - which is often abbreviated to the letter A, especially if it comes after a number. So, for example, 3 Amps can also be written 3A.

To measure the current flowing in a circuit you must connect the ammeter in series with the other components

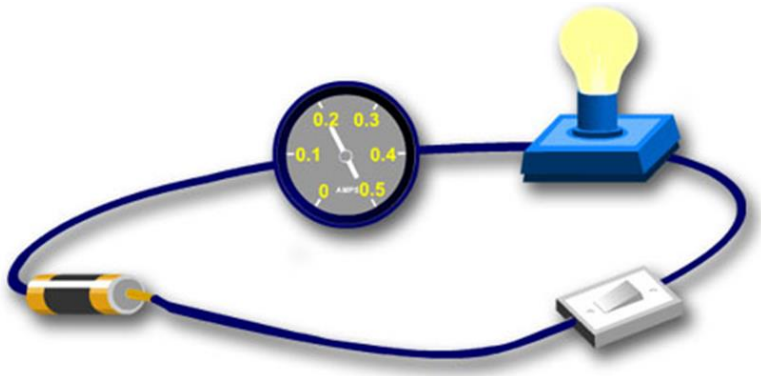

In Series circuits, the current is the same at any point on the circuit	In parallel circuits, the current is shared out between branches
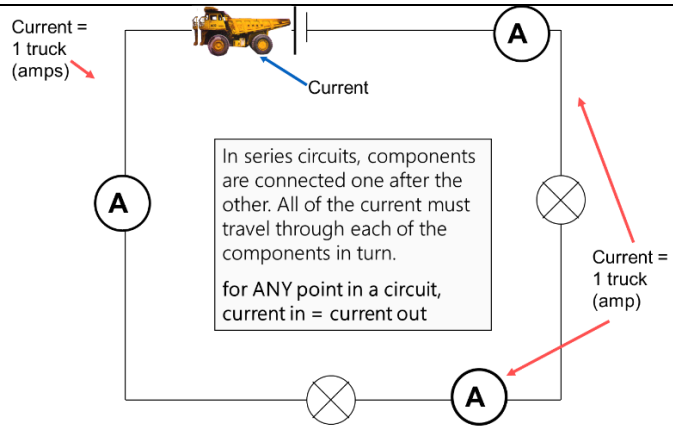	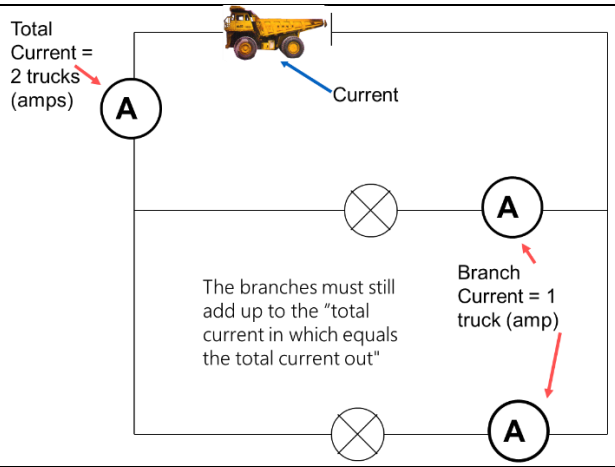

The ‘potential difference’ of an electrical supply is a measure of the energy it can transfer from an electrical supply elsewhere

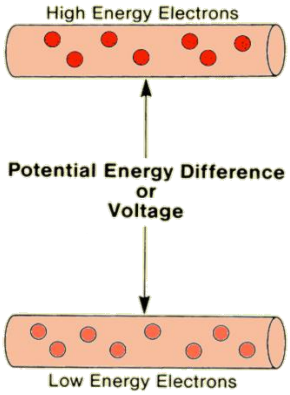

An electric current will not flow through a circuit unless there is a source of energy like a battery or mains electricity to push the electric charges along through the wire.

‘Potential difference' is a measure of how much energy the electric charges have between two points in a circuit. Potential difference is also known as voltage. The more potential difference the more energy is available to be transferred into components attached to a circuit.

Potential difference (voltage) can be measured with a voltmeter

A voltmeter is used to measure potential difference (voltage) and is placed in parallel to an appliance. The potential difference is a difference in energy per amount of charge between two different points of a circuit. We need a device to measure the energies at two points in the circuit and say what the difference is. This is called a voltmeter and measures the numbers of volts.

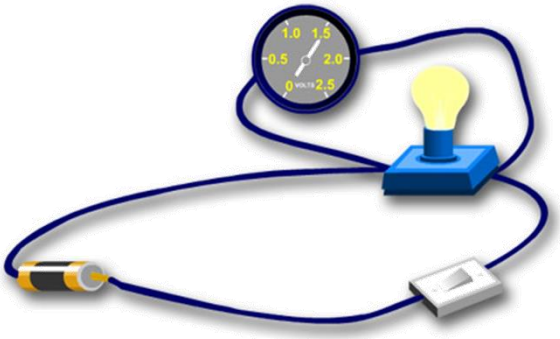

The unit is the volt, V. We can measure the energy of electric charges in a circuit before they enter a bulb and after they leave it by putting a voltmeter in parallel across the bulb.

In Series circuits, the potential difference is “shared out” around the circuit	In parallel circuits, the potential difference is the same across all branches
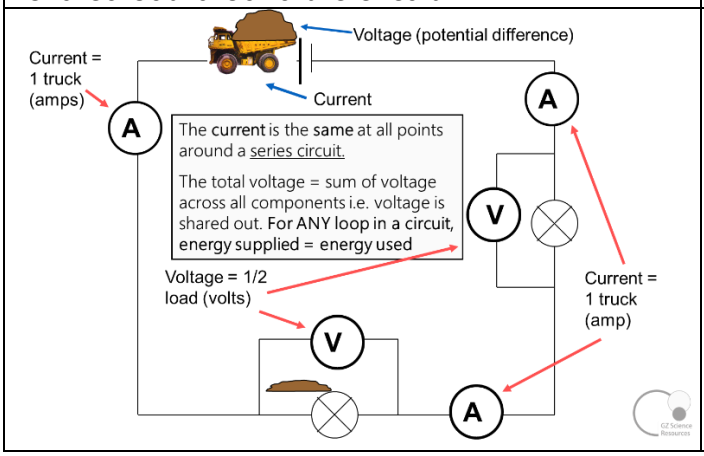	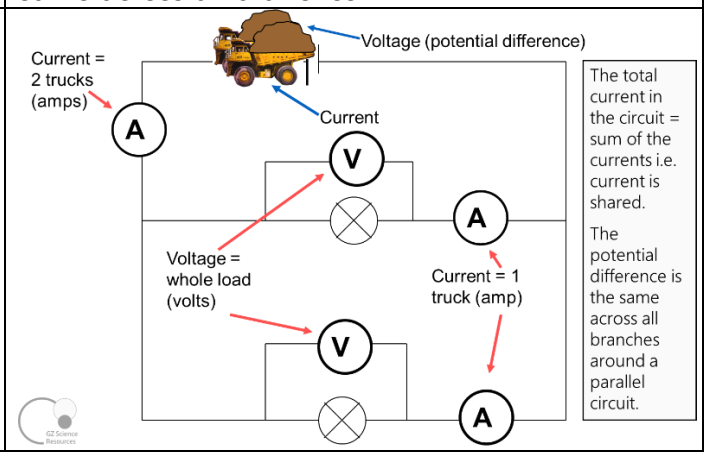

A waterslide analogy of current and potential difference

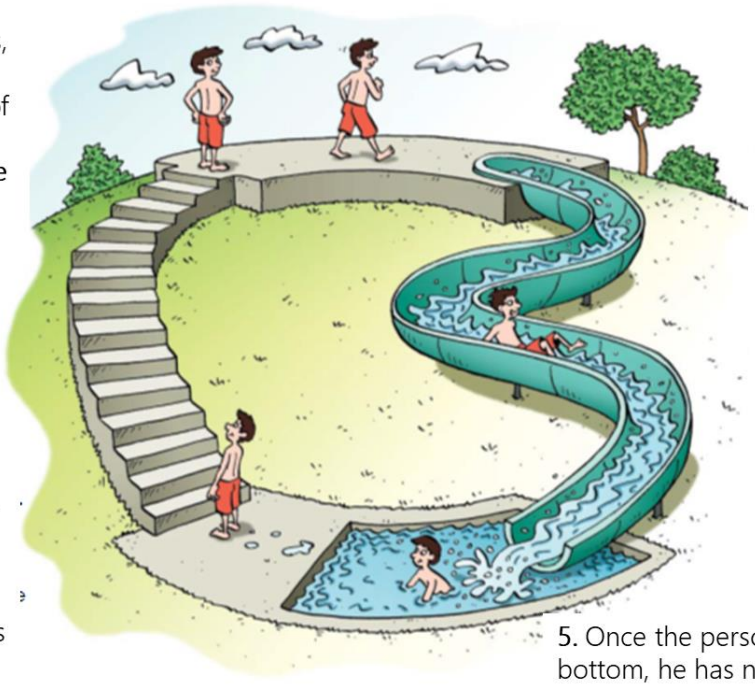

2. Once the person is at the top of the stairs, they have potential energy. The number of stairs he has climbed represents the **voltage** of the battery.

3. As the person walks horizontally along the top platform, he is not changing his potential energy. This is similar to electrons passing through the conducting wire.

4. The person's potential energy drops when he descends the slide. As he slides, his potential energy is transformed into other forms of energy resulting in a potential energy or voltage drop. This is like the electrons passing through the **energy user/component**

1. The person at the bottom of the stairs represents an electron. The stairs are like the battery because they provide potential energy. The person has to climb the stairs

5. Once the person stops in the pool at the bottom, he has no potential energy, and he is ready to climb the stairs again. Electrons in a circuit have zero electric potential energy after passing through the energy user/component

6. The number of people moving around the slide at any time represents the current, the more people, the higher the current.

Current and potential difference in Parallel and Series circuits

	Current	Potential difference (Voltage)
Series	>Same everywhere in the circuit >Doesn't increase as more bulbs added	>total potential difference coming out of battery is all used up by components (i.e. bulb) >total potential difference loss is shared between components
Parallel	>total current coming out of battery is shared amongst branches >increases as more bulbs added	>total potential difference loss is the same across all components

Advantages and Disadvantages of Parallel and Series circuits

	Advantage	Disadvantage
Wiring done in parallel	>Other bulbs remain working if one bulb is blown or removes >All bulbs glow brightly	>More current is needed when extra bulbs added >The battery runs out quicker

	Advantage	Disadvantage
Wiring done in series	>You can turn off all of the appliances / lights with one switch >The wiring is simpler	>If one bulb is disconnected the circuit is not complete and all the bulbs will go out >Resistance of the circuit is greater if more than one bulb – the other bulbs don't glow as brightly >Hard to find the blown bulb

Predictions of Ammeter and voltmeter readings

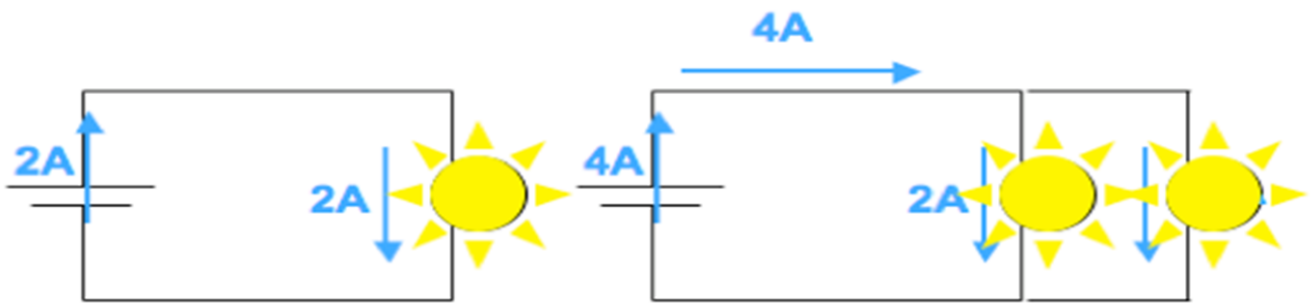

Series **Parallel**

Predictions can be made about the current (amps) in both the series and parallel circuits using the rules. In a series circuit if one component reads 2A then all components will read the same. In a Parallel circuit the current reading leaving the power supply must be divided between branches.

Predictions can also be made about potential difference (voltage) readings with the total potential difference across the power supply shared out to components in a series circuit and equal to the potential difference in each branch of a parallel circuit.

Predictions can be tested by setting up each circuit and taking multiple voltage and current readings

Investigating the brightness of adding bulbs in series and parallel circuits

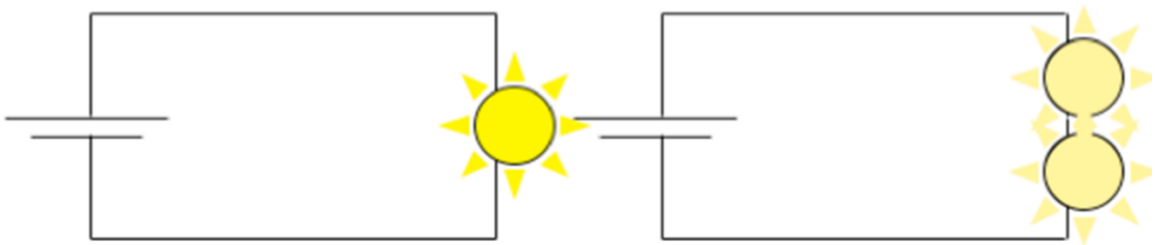

Series

An Investigation will show that the more bulbs that are added to a series circuit the dimmer they will collectively be.

In a parallel circuit if each bulb has its own circuit then the brightness of the bulbs will not be affected.

Electrical resistance

Resistance (symbol R) measures how difficult it is for current to move through a component. Resistance is measured in ohms (symbol Ω)

Resisters will reduce the current that flows through a circuit. Components that add resistance to a circuit can often transform electrical energy in light, sound or heat energy, such as the thin wire in a light bulb.

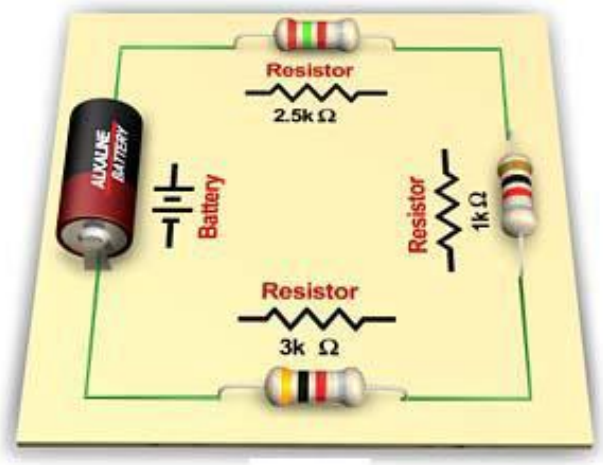

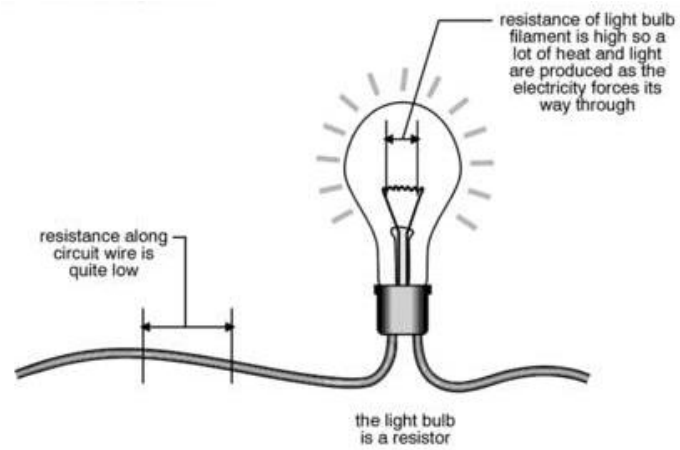

Parts of a circuit which offer high resistance transform a greater amount of electrical energy into light and heat energy. This is why the high resistance, very thin wire of a filament light bulb glows hot and bright while the lower resistance thicker wire providing the current to the bulb stays cooler.

The resistance of a component (in ohms) = potential difference across component / current through component

Resistance is calculated using R = V/I

The resistance of an object determines the amount of current through the object for a given voltage across the object.

Where:

R is the resistance of the object, usually measured in ohms

V is the potential difference across the object, usually measured in volts

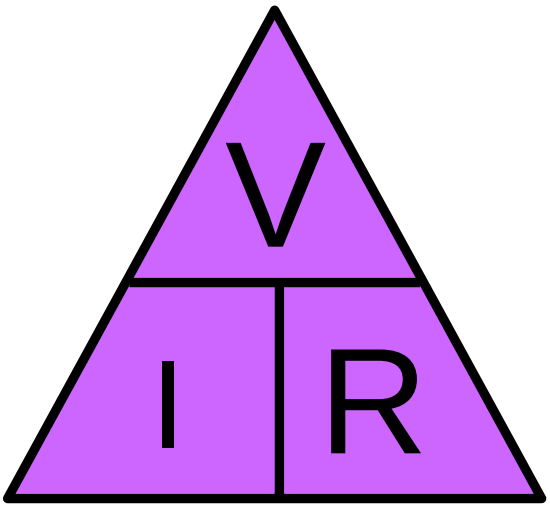

The higher the resistance the less the current.