Science 1.5 AS 90944

Demonstrate understanding of aspects of acids and bases

WORKBOOK

Working to Excellence

CONTENTS

GZ Science Resources

Science 1.5 AS 90944 Demonstrate understanding of aspects of acids and bases

Writing Excellence answers to **Ion Formation** questions

ION FORMATION QUESTION
Question: Compare the atomic structure of F^- and Mg^{2+}. In your answer you should: • describe the difference between an atom and an ion • explain the charges on F^- and Mg^{2+} in terms of electron arrangement and number of protons • relate the position of $F^-$and Mg^{2+} on the periodic table to the charges and electron arrangement • explain why they both have the same electron arrangement.

ANSWER	
1. fluorine number of **protons,** and therefore **electrons**	
2. draw/write fluorine **atom** electron configuration	
3. magnesium number of **protons,** and therefore **electrons**	
4. draw/write magnesium **atom** electron configuration	
5. number of electrons **lost or gained** for fluorine to have stable full outer shell	
6. **group number** of fluorine and number of **outer shell** electrons	
7. draw/write fluorine **ion** electron configuration	
8. number of **protons** and **electrons** in fluorine ion and **charge** of fluorine ion	
9. number of electrons **lost or gained** for magnesium to have stable full outer shell	
10. **group number** of magnesium and number of **outer shell** electrons	
11. draw/write magnesium **ion** electron configuration	
12. number of **protons** and **electrons** in magnesium ion and **charge** of magnesium ion	
13. complete final statement	Both have the same electron arrangement as they have either _____ or _____electrons. The electron arrangement is _____as this is the nearest possible _____ electron arrangement for both.

NOTE: The white column is how your answer would appear on your test paper so make sure you **write out complete sentences**. The grey area is just to help you structure your answer and would not appear in the question.

Science 1.5 AS 90944 Demonstrate understanding of aspects of acids and bases

Writing Excellence answers to **Ionic Compound** questions

IONIC COMPOUND QUESTION
Question: The formula for magnesium oxide is MgO. The formula for aluminium oxide is Al_2O_3.Explain why the two formulae are different. In your answer: • consider the ratio of ions in each formula and explain how the ratio is related to the charge on the ions • relate the ratio of ions in the formula to the number of electrons lost or gained by each atom.

ANSWER	
1. **charge** of magnesium ion and oxide ion (write sentence)	
2. number of electrons lost or gained by **magnesium** to form the ion to have a stable full outer shell (write sentence)	
3. number of electrons lost or gained by **oxygen** to form the ion to have a stable full outer shell (write sentence)	
4. write balanced **formula** for magnesium oxide	
5. **ratio** of magnesium to oxide ions to form neutral compound and cancel out charges (write sentence)	
6. **charge** of aluminium ion and oxide ion (write sentence)	
7. number of electrons lost or gained by **aluminium** to form the ion to have a stable full outer shell (write sentence)	
8. number of electrons lost or gained by **oxygen** to form the ion to have a stable full outer shell (write sentence)	
9. write balanced **formula** for aluminium oxide	
10. **ratio** of aluminium to oxide ions to form neutral compound and cancel out charges (write sentence)	
11. complete final statement	An ionic compound has no overall _____, therefore the charges in the ions in the compounds must _____ out

NOTE: The white column is how your answer would appear on your test paper so make sure you **write out complete sentences**. The grey area is just to help you structure your answer and would not appear in the question.

Science 1.5 AS 90944 Demonstrate understanding of aspects of acids and bases

Writing Excellence answers to **pH, Universal indicator and ions** questions

pH, Universal Indicator and ions QUESTION
Question: A beaker contains sodium hydroxide solution and 5 drops of universal indicator. Sulfuric acid was added to the beaker until no more changes were observed. Describe how the **indicator colour** changes as the sulfuric acid is added to the beaker, AND explain what this tells you about the changing pH of this solution. Explain the relationship between the changing **pH** of the solution and the **ions** in the solution as the sulfuric acid is added to the beaker. Explain the advantages of using **universal indicator** compared to **litmus paper.**

ANSWER	
1. state the overall reaction that is occurring naming the acid and base and the product formed.	
2. compare the colour and relative concentration of **H^+ and OH^- ions** in beaker at the start and link to pH	**Step 1:**
3. describe the colour change, pH range and concentration of H^+/OH^- ions as more acid added.	**Step 2:**
4. describe the colour change, pH and concentration of H^+/OH^- ions as yet more acid added to form a **neutral solution**	**Step 3:**
5. describe the colour change, pH range and concentration of H^+/OH^- ions as more acid added **past neutral**	**Step 4:**
6. describe the colour change, pH range and concentration of H^+/OH^- ions as more acid added to make a **strong acid solution**	**Step 5:**
7. describe the colour changes of **litmus** (red and blue) linked to acid, base or neutral	
8. describe the colour changes of **Universal indicator** linked to pH	
9. complete final statement	Universal Indicator tells us more information about a solutions pH than_____ and tells us **how** acidic, basic a solution is or if it is _____. Litmus is _____as it only tells us if it is acid, basic, or neutral whereas Universal Indicator tells us how acidic or basic it is.

NOTE: The white column is how your answer would appear on your test paper so make sure you **write out complete sentences**. The grey area is just to help you structure your answer and would not appear in the question.

Science 1.5 AS 90944 Demonstrate understanding of aspects of acids and bases

Writing Excellence answers to **Reaction Rate Factors** questions

Reaction Rates Factors QUESTION
Question: The reaction between calcium carbonate and nitric acid is carried out at 20°C and 50 °C. The mass and size of the marble chips, and the concentration and volume of nitric acid used **were kept the same.** (i) Draw a line on the graph that represents the reaction at 20°C (the line for 50 °C has already been drawn) (ii) Explain why you drew this line where you did, and explain if this means that the rate of reaction is slower, the same, or faster. In your answer you should • discuss why you drew your line with the slope that you did, and why you stopped the line at the point that you did • explain the effect of temperature on reaction rate, in terms of particle collisions.

ANSWER	
1. Draw the line for the reaction at 20°C (use another colour)	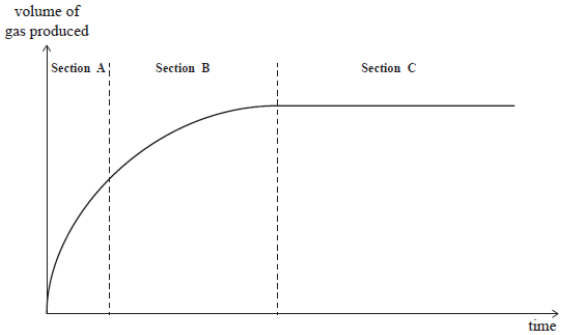
2. **link the slope of the graph** to a faster or slower reaction.	
3. **link the line** stopping (zero gradient) to all of the reactants being used up and changed to products.	
4. link the **same amount of products** made to the initial concentration/ amount of products in both cases	
5. State whether the higher temperature causes a faster or slower **reaction rate**	
6. link the temperature of the particles to more or less **kinetic energy** and more or less **speed**.	
7. state that particles need to collide with enough energy (to overcome activation energy) to be a **successful collision**, and therefore a reaction occurs	
8. link faster moving particles to more **successful, frequent** (or per unit of time) collisions	
9. link more frequent successful collisions to a **faster reaction rate**	

NOTE: The white column is how your answer would appear on your test paper so make sure you **write out complete sentences**. The grey area is just to help you structure your answer and would not appear in the question.

Science 1.5 AS 90944 Demonstrate understanding of aspects of acids and bases

ANSWERS: Writing Excellence answers to **Ion formation** questions

ION FORMATION QUESTION
Question: Compare the atomic structure of F^- and Mg^{2+}. In your answer you should: • describe the difference between an atom and an ion • explain the charges on F^- and Mg^{2+} in terms of electron arrangement and number of protons • relate the position of $F^-$and Mg^{2+} on the periodic table to the charges and electron arrangement • explain why they both have the same electron arrangement.

ANSWER	
1. fluorine number of **protons**	The Fluorine atom has 9 protons, and therefore 9 electrons
2. Draw fluorine **atom** electron configuration	The configuration of the Fluorine atom is 2,7
3. magnesium number of **protons**	The Magnesium atom has 12 protons, and therefore 12 electrons
4. draw magnesium **atom** electron configuration	The configuration of the Magnesium atom is 2,8,2
5. number of electrons **lost or gained** for fluorine to have stable full outer shell	Fluorine must gain 1 electron to have a stable full outer shell of electrons and form a F^- ion
6. **group number** of fluorine and number of **outer shell** electrons	Fluorine is in group 17 and therefore has 7 valence (outer shell) electrons
7. draw fluorine **ion** electron configuration	The configuration of the fluorine ion becomes 2,8
8. number of **protons** and **electrons** in fluorine ion and **charge** of fluorine ion	The fluorine ion has 9 protons and 10 electrons so the overall charge of the ion becomes -1
9. number of electrons **lost or gained** for magnesium to have stable full outer shell	Magnesium must lose 2 electrons to have a stable full outer shell of electrons and form a Mg^{2+} ion
10. **group number** of magnesium and number of **outer shell** electrons	Magnesium is in group 2 and therefore has 2 valence (outer shell) electrons
11. draw magnesium **ion** electron configuration	The configuration of the magnesium ion becomes 2,8
12. number of **protons** and **electrons** in magnesium ion and **charge** of magnesium ion	The magnesium ion has 12 protons and 10 electrons so the overall charge of the ion becomes +2
13. complete final statement	Both have the same electron arrangement as they have either <u>gained</u> or <u>lost</u> electrons. The electron arrangement is <u>2, 8</u> as this is the nearest possible <u>stable</u> electron arrangement for both.

Science 1.5 AS 90944 Demonstrate understanding of aspects of acids and bases

ANSWERS: Writing Excellence answers to **Ionic Compound** questions

IONIC COMPOUND QUESTION
Question: The formula for magnesium oxide is MgO. The formula for aluminium oxide is Al_2O_3.Explain why the two formulae are different. In your answer: • consider the ratio of ions in each formula and explain how the ratio is related to the charge on the ions • relate the ratio of ions in the formula to the number of electrons lost or gained by each atom.

ANSWER	
1. **charge** of magnesium ion and oxide ion (write sentence)	The charge of the magnesium ion is Mg^{2+} and the charge on the oxide ion is O^{2-}
2. number of electrons lost or gained by **magnesium** to form the ion to have a stable full outer shell (write sentence)	Magnesium must lose 2 electrons to form the Mg^{2+} ion to form a stable full outer shell
3. number of electrons lost or gained by **oxygen** to form the ion to have a stable full outer shell (write sentence)	Oxygen must gain 2 electrons to form the O^{2-} ion (oxide) to form a stable full outer shell
4. write balanced **formula** for magnesium oxide	The formula for magnesium oxide becomes MgO
5. **ratio** of magnesium to oxide ions to form a neutral compound and cancel out charges (write sentence)	The ration of magnesium to oxide ions is 1:1 to form a neutral compound and cancel out the charges
6. **charge** of aluminium ion and oxide ion (write sentence)	The charge of the aluminium ion is Al^{3+} and the charge on the oxide ion is O^{2-}
7. number of electrons lost or gained by **aluminium** to form the ion to have a stable full outer shell (write sentence)	Aluminium must lose 3 electrons to form the Al^{3+} ion to form a stable full outer shell
8. number of electrons lost or gained by **oxygen** to form the ion to have a stable full outer shell (write sentence)	Oxygen must gain 2 electrons to form the O^{2-} ion (oxide) to form a stable full outer shell
9. write balanced **formula** for aluminium oxide	The formula for aluminium oxide becomes Al_2O_3
10. **ratio** of aluminium to oxide ions to form neutral compound and cancel out charges (write sentence)	The ration of aluminium to oxide ions is 2:3 to form a neutral compound and cancel out the charges
11. complete final statement	An ionic compound is neutral has no overall <u>charge</u> therefore the charges in the ions in the compounds must <u>cancel</u> out

Science 1.5 AS 90944 Demonstrate understanding of aspects of acids and bases

ANSWERS: Writing Excellence answers to **pH, Universal indicator and ions** questions

pH, Universal Indicator and ions QUESTION
Question: A beaker contains sodium hydroxide solution and 5 drops of universal indicator. Sulfuric acid was added to the beaker until no more changes were observed. Describe how the **indicator colour** changes as the sulfuric acid is added to the beaker, AND explain what this tells you about the changing pH of this solution. Explain the relationship between the changing **pH** of the solution and the **ions** in the solution as the sulfuric acid is added to the beaker. Explain the advantages of using **universal indicator** compared to **litmus paper.**

ANSWER	
1. state the overall reaction that is occurring naming the acid and base and the product formed.	When sulfuric acid is added to sodium hydroxide the solution turns from base to a neutral solution where a salt and water are made. When more sulfuric acid is added the solution will become more acidic.
2. compare the colour and relative concentration of **H^+ and OH^- ions** in beaker at the start and link to pH	**Step 1:** When no acid has been added, the solution is purple and has a pH of 12–14 and there is an excess of OH- ions and very few H^+ ions. This solution will be a strong base.
3. describe the colour change, pH range and concentration of H^+/OH^- ions as more acid added.	**Step 2:** When a small amount of acid has been added, the solution is blue and has a pH of 8–11 and there is an still an excess of OH- ions, but less than when no acid was added and few H^+ ions. This solution will be a weak base
4. describe the colour change, pH and concentration of H^+/OH^- ions as yet more acid added to form a **neutral solution**	**Step 3:** When more acid has been added, the solution becomes neutral and is green and has a pH of 7, there will be an equal amount of OH- ions and H^+ ions.
5. describe the colour change, pH range and concentration of H^+/OH^- ions as more acid added **past neutral**	**Step 4:** When more acid has been added, the solution will turn orange/yellow and has a pH of 6-3 and there is now an excess of H+ ions and less OH^- ions than that. This solution will be a weak acid
6. describe the colour change, pH range and concentration of H^+/OH^- ions as more acid added to make a **strong acid solution**	**Step 5:** When even more acid has been added, the solution will turn red and has a pH of 1-2 and there is now a large excess of H+ ions and very few OH^- ions. This solution will be a strong acid.
7. describe the colour changes of **litmus** (red and blue) linked to acid, base or neutral	Litmus paper is useful to tell us if a solution is acidic, basic or neutral. (When blue litmus turns red and red litmus stays red, this tells us the solution is acidic. When both blue and red litmus papers stay the same, this tells us the solution is neutral. When red turns blue, this tells the solution is basic)
8. describe the colour changes of **Universal indicator** linked to pH	Universal indicator has many different colours that not only tell us if a solution is acid, base or neutral but allows us to tell the pH of the solution
9. complete final statement	Universal Indicator tells us more information about a solutions pH than <u>Litmus paper</u> and tells us **how** acidic, basic a solution is or if it is <u>neutral</u>. Litmus is <u>limited</u> as it only tells us if it is acid, basic, or neutral whereas Universal Indicator tells us how acidic or basic it is.

NOTE: The white column is how your answer would appear on your test paper so make sure you **write out complete sentences**. The grey area is just to help you structure your answer and would not appear in the question.

Science 1.5 AS 90944 Demonstrate understanding of aspects of acids and bases

ANSWERS: Writing Excellence answers to **Reaction Rate Factors** questions

Reaction Rates Factors QUESTION	
Question: The reaction between calcium carbonate and nitric acid is carried out at 20°C and 50 °C. The mass and size of the marble chips, and the concentration and volume of nitric acid used **were kept the same.** (i) Draw a line on the graph that represents the reaction at 20°C (the line for 50 °C has already been drawn) (ii) Explain why you drew this line where you did, and explain if this means that the rate of reaction is slower, the same, or faster. In your answer you should • discuss why you drew your line with the slope that you did, and why you stopped the line at the point that you did • explain the effect of temperature on reaction rate, in terms of particle collisions.	
ANSWER	
1. Draw the line for the reaction at 20°C (use another colour)	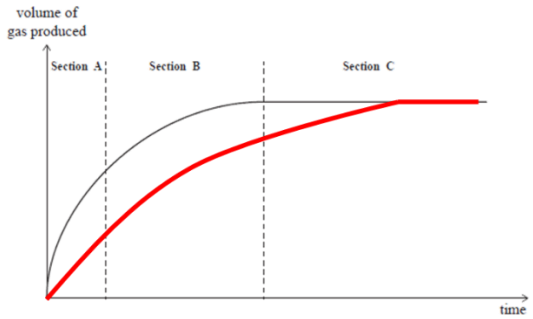
2. **link the slope of the graph** to a faster or slower reaction.	**The line showing the reaction at** 20°C is less steep (lower gradient) than the line for 50 °C. This shows that the reaction is slower at 20°C than at 50 °C
3. **link the line** stopping (zero gradient) to all of the reactants being used up and changed to products.	Both lines become horizontal at the same point on the Y-axis, as this is when both reactions have finished, i.e. one of the reactants has been completely used up and therefore no more gas is produced.
4. link the **same amount of products** made to the initial concentration/ amount of products in both cases	Both finished with same amount of gas produced, as both reactions had the same amount of reactants to start with.
5. State whether the higher temperature causes a faster or slower **reaction rate**	A higher temperature will cause a faster reaction rate (OR: a lower temperature will produce a slower reaction rate)
6. link the temperature of the particles to more or less **kinetic energy** and more or less **speed**.	The reaction is faster at the higher temperature, because the particles have more **kinetic energy**, and therefore are **moving faster**. (OR: the reaction is slower at the lower temperature, because the particles have less kinetic energy, and therefore are moving slower
7. state that particles need to collide with enough energy (to overcome activation energy) to be a **successful collision**, and therefore a reaction occurs	Particles need to collide with enough energy (to overcome activation energy) to be a **successful collision**, and therefore a reaction occurs
8. link faster moving particles to more **successful, frequent** (or per unit of time) collisions	When particles are moving faster, there will be **more frequent collisions**, and more of these **collisions will be effective**, as the particles will collide with more energy. (OR: When they are moving slower, there will be less frequent collisions, and less of these collisions will be effective, as the particles will collide with less energy.)
9. link more frequent successful collisions to a **faster reaction rate**	More frequent successful collisions will result in a faster **reaction rate**. (in the higher temperature compared to the lower temperature)

NOTE: The white column is how your answer would appear on your test paper so make sure you **write out complete sentences**. The grey area is just to help you structure your answer and would not appear in the question.

Science 1.5 AS 90944 Demonstrate understanding of aspects of acids and bases

Changing compound words into formulas – Visual balancing

Success Criteria: complete each level before moving onto the next

- Basic: write **ion formula** for the following named ion compounds
- Proficient: write **the number of each ion** required to balance the charges
- Advanced: **balance the ion compounds** to create a neutral compound

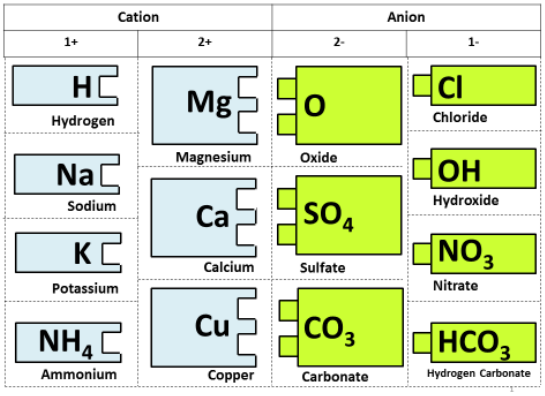

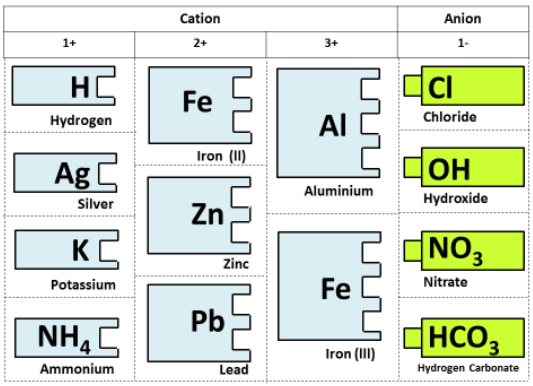

Example

Name of compound	calcium hydroxide
Formula of ions	Ca^{2+} OH^{-}
Number of each ion required to balance charges	1 2
Formula of compound	$Ca(OH)_2$

Remember:

+ charge means electrons are missing from the ion compared to when they were atoms, the number by the + tells us how many electrons are missing. Each missing electron is a space.

- charge means electrons are added to the ions compared to when they were atoms, the number by the – tells us how many electrons are added. Each added electron is a tab.

The total number of tabs and spaces in the ions must match to make a neutral compound.

We don't write the number 1 in compounds.

Put brackets around a compound ion (that has more than one type of atom in it) if you need 2 or more of them to balance in a compound

Name of compound	magnesium chloride
Formula of ions	
Number of each ion required to balance charges	
Formula of compound	

Name of compound	sodium carbonate
Formula of ions	
Number of each ion required to balance charges	
Formula of compound	

Name of compound	copper nitrate
Formula of ions	
Number of each ion required to balance charges	
Formula of compound	

Name of compound	iron (II) hydroxide
Formula of ions	
Number of each ion required to balance charges	
Formula of compound	

Name of compound	lead oxide
Formula of ions	
Number of each ion required to balance charges	
Formula of compound	

Name of compound	silver nitrate
Formula of ions	
Number of each ion required to balance charges	
Formula of compound	

Name of compound	calcium carbonate
Formula of ions	
Number of each ion required to balance charges	
Formula of compound	

Name of compound	iron (III) nitrate
Formula of ions	
Number of each ion required to balance charges	
Formula of compound	

Name of compound	zinc oxide
Formula of ions	
Number of each ion required to balance charges	
Formula of compound	

Name of compound	lead chloride
Formula of ions	
Number of each ion required to balance charges	
Formula of compound	

Science 1.5 AS 90944 Demonstrate understanding of aspects of acids and bases

Changing compound words into formulas – Visual balancing

Success Criteria: complete each level before moving onto the next

- Basic: write **ion formula** for the following named ion compounds
- Proficient: write **the number of each ion** required to balance the charges
- Advanced: **balance the ion compounds** to create a neutral compound

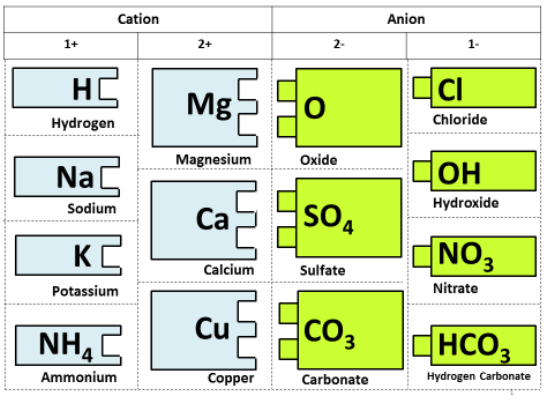

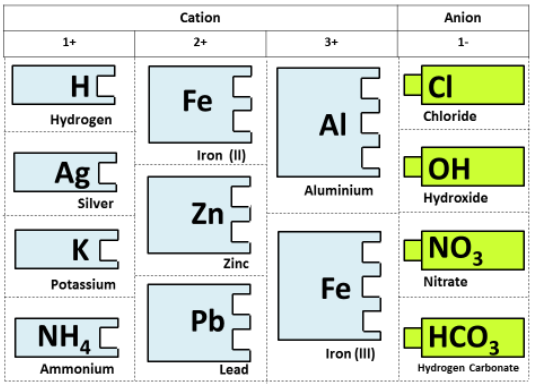

Name of Compound	Positive ion (cation)	Negative ion (anion)	Formula of compound
Magnesium Chloride			
Lead oxide			
Sodium chloride			
Potassium chloride			
Copper sulfate			
Silver chloride			
Ammonium sulfate			
Calcium hydroxide			
Zinc nitrate			
Copper hydrogen carbonate			
Lead nitrate			
Iron (iii) hydroxide			
Potassium oxide			
Iron (ii) carbonate			
Ammonium carbonate			
Silver hydrogen carbonate			
Sodium carbonate			

Science 1.5 AS 90944 Demonstrate understanding of aspects of acids and bases

Changing general word equations into balanced symbol equations

Success Criteria: complete each level before moving onto the next

- Basic: write **word equations** for the following reactions
- Proficient: write **symbol equations** for the following reactions
- Advanced: **balance the symbol equations** for the following reactions

Acid + Hydroxide (Base):

Acid + **Base** → **salt** + **water**

1. hydrochloric acid is mixed with copper hydroxide to produce copper chloride and water.

Word equation _____

Symbol equation _____

Acid + carbonate (Base):

Acid + **Base** → **salt** + **water** + **carbon dioxide**

2. sulfuric acid is mixed with sodium carbonate to produce sodium sulfate and water and carbon dioxide .

Word equation _____

Symbol equation _____

Acid + oxide (Base):

Acid + **Base** → **salt** + **water**

3. nitric acid is heated with magnesium oxide to produce magnesium nitrate and water

Word equation _____

Symbol equation _____

Acid + hydrogen carbonate (Base):

Acid + **Base** → **salt** + **water** + **carbon dioxide**

4. hydrochloric acid is added to calcium hydrogen carbonate solution to produce calcium chloride and water and carbon dioxide

Word equation _____

Symbol equation _____

Science 1.5 AS 90944 Demonstrate understanding of aspects of acids and bases

Information Sheet

Name of acid	Formula of acid	Name of salt formed	Formula of ion
hydrochloric acid	HCl	chloride	Cl^-
sulfuric acid	H_2SO_4	sulfate	SO_4^{2-}
nitric acid	HNO_3	nitrate	NO_3^-

Cation			Anion	
1+	2+	3+	2-	1-
H Hydrogen	Mg Magnesium	Fe Iron (III)	O Oxide	Cl Chloride
Na Sodium	Ca Calcium		SO_4 Sulfate	OH Hydroxide
K Potassium	Cu Copper	Al Aluminium	CO_3 Carbonate	NO_3 Nitrate
NH_4 Ammonium	Pb Lead		S Sulfide	HCO_3 Hydrogen Carbonate
Ag Silver	Zn Zinc	Fe Iron (III)		F fluoride
Li Lithium	Fe Iron (II)			

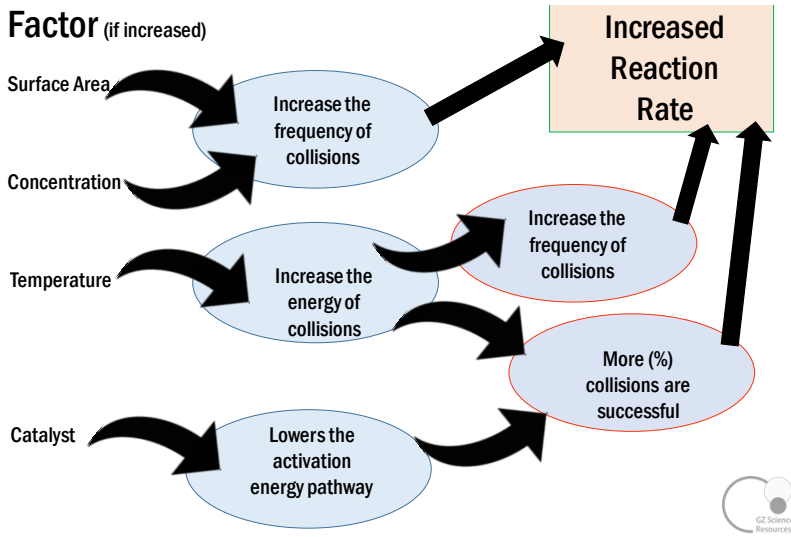

PERIODIC TABLE OF THE ELEMENTS

Atomic Number

1	2	3	4	5	6	7	8	9	10	11	12	13	14	15	16	17	18
1 H																	2 He
3 Li	4 Be											5 B	6 C	7 N	8 O	9 F	10 Ne
11 Na	12 Mg											13 Al	14 Si	15 P	16 S	17 Cl	18 Ar
19 K	20 Ca	21 Sc	22 Ti	23 V	24 Cr	25 Mn	26 Fe	27 Co	28 Ni	29 Cu	30 Zn	31 Ga	32 Ge	33 As	34 Se	35 Br	36 Kr
37 Rb	38 Sr	39 Y	40 Zr	41 Nb	42 Mo	43 Tc	44 Ru	45 Rh	46 Pd	47 Ag	48 Cd	49 In	50 Sn	51 Sb	52 Te	53 I	54 Xe
55 Cs	56 Ba	71 Lu	72 Hf	73 Ta	74 W	75 Re	76 Os	77 Ir	78 Pt	79 Au	80 Hg	81 Tl	82 Pb	83 Bi	84 Po	85 At	86 Rn
87 Fr	88 Ra	103 Lr	104 Rf	105 Db	106 Sg	107 Bh	108 Hs	109 Mt									

57 La	58 Ce	59 Pr	60 Nd	61 Pm	62 Sm	63 Eu	64 Gd	65 Tb	66 Dy	67 Ho	68 Er	69 Tm	70 Yb
89 Ac	90 Th	91 Pa	92 U	93 Np	94 Pu	95 Am	96 Cm	97 Bk	98 Cf	99 Es	100 Fm	101 Md	102 No